Dell EMC VxFlex Ready Node

Server Installation Guide

Rev 01

October 2019

DELL EMC

Copyright © 2019 Dell Inc. or its subsidiaries. All rights reserved.

Dell believes the information in this publication is accurate as of its publication date. The information is subject to change without notice.

THE INFORMATION IN THIS PUBLICATION IS PROVIDED "AS-IS." DELL MAKES NO REPRESENTATIONS OR WARRANTIES OF ANY KIND WITH RESPECT TO THE INFORMATION IN THIS PUBLICATION, AND SPECIFICALLY DISCLAIMS IMPLIED WARRANTIES OF MERCHANTABILITY OR FITNESS FOR A PARTICULAR PURPOSE. USE, COPYING, AND DISTRIBUTION OF ANY DELL SOFTWARE DESCRIBED IN THIS PUBLICATION REQUIRES AN APPLICABLE SOFTWARE LICENSE.

Dell Technologies, Dell, EMC, Dell EMC and other trademarks are trademarks of Dell Inc. or its subsidiaries. Other trademarks may be the property of their respective owners. Published in the USA.

Dell EMC
Hopkinton, Massachusetts 01748-9103
1-508-435-1000 In North America 1-866-464-7381
www.DellEMC.com

Contents

Figures 5

Tables 7

Preface 9

Chapter 1 Before You Begin 11
Before you begin 12
Conventions used in this document 13
Where to get help 13
Site requirements 13
Hardware acclimation times 14

Part 1 R640 Procedures 17

Chapter 2 R640 Equipment Installation 19
Installation of the equipment in the cabinet 20
Installation in cabinets with single-phase power distribution 20
Installation in cabinets with 3-phase delta power distribution 23
Installation in cabinets with 3-phase wye power distribution 27
Identifying the kit components 30
Install the rails 31
Secure the rail assemblies to the cabinet 32
Install the system in the cabinet 33
Install the front bezel 35
Connect and route cords and cables 36

Chapter 3 Install AC Power Cables 37
Guidelines for installing and connecting AC power cables 38
Sample single-phase wiring for R640 servers 39

Chapter 4 Install Management Network I/O Cables 43
Guidelines for installing and connecting management network cables 44
Management network A, nodes 1 - 16 cabling 45
Management network A, nodes 17 - 22 cabling 46
Management network B, nodes 23 - 32 cabling 47

Chapter 5 Install Data Network I/O Cables 49
Data network A, nodes 1 - 22 cabling example 50
Data network B, nodes 1 - 22 cabling example 51

Chapter 6 Update the Install Database 53
Update the install database 54

Part 2 R740XD Procedures 55

Chapter 7 R740XD Configuration Equipment Installation 57
Installation of the equipment in the cabinet 58
R740xd configuration installation guidelines 58
Identifying the kit components 59

Install the rails.... 61
Secure the rail assemblies to the cabinet.... 62
Install the system in the cabinet.... 63
Install the front bezel.... 65
Connect and route cords and cables.... 66

Chapter 8 Wiring Diagrams for a R740XD Configuration.... 67
Guidelines for wiring a R740XD configuration.... 68
Sample single-phase wiring for R740XD servers.... 69
Management network wiring for R740XD servers.... 72
Data network A wiring for R740XD servers.... 74
Data network B wiring for R740XD servers.... 76

Chapter 9 Update the Install Database.... 77
Update the install database.... 78

Part 3 R840 Procedures.... 79

Chapter 10 R840 Equipment Installation.... 81
R840 server installation guidelines.... 82
Installation of the equipment in the cabinet.... 83
Identify the kit components.... 84
Install the rails.... 84
Secure the rail assemblies to the cabinet.... 85
Install the front bezel.... 86
Install the strain relief bar, route and secure cables.... 87

Chapter 11 Cabling Guidelines.... 89

Chapter 12 Update the Install Database.... 91
Update the install database.... 92

Figures

1 Cabinet stack up for a minimum configuration.... 21
2 Cabinet stack up for a maximum configuration.... 23
3 Cabinet stack up for a minimum configuration.... 25
4 Cabinet stack up for a maximum configuration.... 26
5 Cabinet stack up for a minimum configuration.... 28
6 Cabinet stack up for a maximum configuration.... 29
7 A10 sliding rail assembly - 1U systems.... 30
8 B13 sliding rail assembly - 2U systems.... 31
9 Installing the rear end of the rail.... 32
10 Installing the front end of the rail.... 32
11 Installing screws.... 33
12 Pull the inner rails out of the cabinet.... 33
13 Install the system in the rails.... 34
14 Slide the system into the cabinet.... 34
15 Installing the front bezel on 1U system.... 35
16 Installing the front bezel on 2U system'.... 35
17 CMA bracket slots.... 36
18 AC Connectors on rear panel of servers and switches.... 38
19 Single-phase power distribution.... 39
20 Console and management ports on switches.... 44
21 Management A, nodes 1 - 16 cabling example.... 45
22 Data networks A and B cabling example.... 50
23 Cabinet stack up for R740xd servers.... 59
24 A10 sliding rail assembly - 1U systems.... 60
25 B13 sliding rail assembly - 2U systems.... 60
26 Installing the rear end of the rail.... 61
27 Installing the front end of the rail.... 62
28 Installing screws.... 62
29 Pull the inner rails out of the cabinet.... 63
30 Install the system in the rails.... 64
31 Slide the system into the cabinet.... 64
32 Installing the front bezel on 1U system.... 65
33 Installing the front bezel on 2U system'.... 65
34 CMA bracket slots.... 66
35 Power connectors on rear panel of servers and switches.... 68
36 Single-phase power distribution.... 70
37 Management network 72
38 Data networks A and B.... 75
39 Cabinet stack up for R840 servers.... 83
40 Sliding rail assembly.... 84
41 Installing the rear end of the rail.... 85
42 Installing the front end of the rail.... 85
43 Installing screws.... 86
44 Installing the front bezel on the system.... 87
45 Installing the strain relief bar.... 88
46 Using hook-and-loop straps to secure cables.... 88
47 Example Rack and Stack configuration.... 90

Tables

1 Site requirements....13
2 Minimum configuration in single-phase power distribution cabinets....20
3 Maximum configuration in single-phase power distribution cabinets....21
4 Minimum configuration in 3-phase delta power distribution cabinets....24
5 Stack up for a maximum configuration....25
6 Minimum configuration in 3-phase wye power distribution cabinets....27
7 Maximum configuration in 3-phase wye power distribution cabinets....28
8 Single-phase power distribution cabling (from top to bottom)....39
9 Management A, nodes 1 -16 cabling....45
10 Management A, nodes 17 - 22 cabling....47
11 Management B, nodes 23 -32 cabling....47
12 Data A, nodes 1 - 22 cabling....50
13 Data B, nodes 1 - 22 cabling....51
14 Stack up for a minimum configuration....58
15 Stack up for a maximum configuration....58
16 Single-phase power distribution cabling....70
17 Management network cabling....73
18 Data network A cabling....75
19 Data network B cabling....76
20 Stack up for a minimum configuration....82
21 Stack up for a maximum configuration....82

Preface

As part of an effort to improve its product lines, Dell EMC periodically releases revisions of its software and hardware. Therefore, some functions described in this document might not be supported by all versions of the software or hardware currently in use. The product release notes provide the most up-to-date information on product features.

Contact your Dell EMC technical support professional if a product does not function properly or does not function as described in this document.

Note: This document was accurate at publication time. Go to Dell EMC Online Support (https://support.emc.com) to ensure that you are using the latest version of this document.

Previous versions of Dell EMC VxFlex OS were marketed under the name Dell EMC ScaleIO.

Similarly, previous versions of Dell EMC VxFlex Ready Node were marketed under the name Dell EMC ScaleIO Ready Node.

References to the old names in the product, documentation, or software, etc. will change over time.

Note: Software and technical aspects apply equally, regardless of the branding of the product.

Related documentation

The release notes for your version includes the latest information for your product.

The following Dell EMC publication sets provide information about your VxFlex OS or VxFlex Ready Node product:

- VxFlex OS software (downloadable as VxFlex OS Software <version> Documentation set)
- VxFlex Ready Node with AMS (downloadable as VxFlex Ready Node with AMS Documentation set)
- VxFlex Ready Node no AMS (downloadable as VxFlex Ready Node no AMS Documentation set)
- VxRack Node 100 Series (downloadable as VxRack Node 100 Series Documentation set)

You can download the release notes, the document sets, and other related documentation from Dell EMC Online Support.

Typographical conventions

Dell EMC uses the following type style conventions in this document:

Bold	Used for names of interface elements, such as names of windows, dialog boxes, buttons, fields, tab names, key names, and menu paths (what the user specifically selects or clicks)
Italic	Used for full titles of publications referenced in text
`Monospace`	Used for: • System code • System output, such as an error message or script • Pathnames, filenames, prompts, and syntax • Commands and options
Monospace italic	Used for variables
`Monospace bold`	Used for user input
[ ]	Square brackets enclose optional values
|	Vertical bar indicates alternate selections - the bar means “or”
{ }	Braces enclose content that the user must specify, such as x or y or z

...	Ellipses indicate nonessential information omitted from the example

Where to get help

Dell EMC support, product, and licensing information can be obtained as follows:

Product information

For documentation, release notes, software updates, or information about Dell EMC products, go to Dell EMC Online Support at https://support.emc.com.

Technical support

Go to Dell EMC Online Support and click Service Center. You will see several options for contacting Dell EMC Technical Support. Note that to open a service request, you must have a valid support agreement. Contact your Dell EMC sales representative for details about obtaining a valid support agreement or with questions about your account.

Your comments

Your suggestions will help us continue to improve the accuracy, organization, and overall quality of the user publications. Send your opinions of this document to techpubcomments@emc.com.

CHAPTER 1

Before You Begin

This section provides information for obtaining assistance, and for preparing for the installation of the VxFlex Ready Node servers.

- Before you begin 12
- Conventions used in this document 13
- Where to get help 13
- Site requirements 13
- Hardware acclimation times 14

Before you begin

WARNING Before you begin, read and follow the safety instructions in your Safety, Environmental, and Regulatory information document shipped with your system.

WARNING To avoid injury, do not attempt to lift the system by yourself.

Note: The illustrations in this document do not represent a specific system.

Note: The procedures to install the 1U and 2U rails are identical.

Note: The rail kit is compatible with square, unthreaded round, and threaded round hole racks.

Conventions used in this document

Dell EMC uses the following conventions for special notices:

DANGER DANGER indicates a hazardous situation which, if not avoided, will result in death or serious injury.

WARNING WARNING indicates a hazardous situation which, if not avoided, could result in death or serious injury.

CAUTION CAUTION, used with the safety alert symbol, indicates a hazardous situation which, if not avoided, could result in minor or moderate injury.

NOTICE NOTICE is used to address practices not related to personal injury.

Note: A note presents information that is important, but not hazard-related.

Where to get help

Dell EMC technical support, documentation, release notes, software updates, or information about Dell EMC products can be obtained on the Dell EMC Online Support site https://support.emc.com(registration required).

Note: To open a service request through the Dell EMC Online Support site, you must have a valid support agreement. Contact your Dell EMC sales representative for details about obtaining a valid support agreement or to answer any questions about your account.

The Support by Product web pages offer quick links to Documentation, White Papers, Advisories (such as frequently used Knowledgebase articles), and Downloads, as well as more dynamic content, such as presentations, discussions, relevant Customer Support Forum entries, and a link to Dell EMC Live Chat.

Dell EMC Live Chat — Open a Chat or instant message session with a Dell EMC Support Engineer.

Site requirements

Confirm that the customer site meets all requirements before you begin the installation.

The following table describes site requirements and provides references to additional information.

Table 1 Site requirements

Requirement	Description
Computer room	The system requires a properly equipped computer room with controlled temperature and humidity, proper airflow and ventilation, proper power and grounding, system cable routing facilities, and fire equipment.
Power	The system is fed power from two independent power sources, zone A and zone B. To assure fault tolerant power, customer-supplied AC power must be connected to independent power distribution units (PDUs).

Table 1 Site requirements (continued)

Requirement	Description
System acclimation	The system must be acclimated to the new environment before hardware is installed. To acclimate the system, place the unpacked system bays in the new operating environment. Open the front and the rear door of each bay and let the system stabilize up to four hours in dry conditions and up to sixteen hours in hot and humid conditions. Do not apply AC power until the system is acclimated to the local environment.
Customer installed cables	Dispersed system bays include longer switch and Ethernet cable bundles that extend the separation distance between system bay 1 and one or more dispersed system bays. Cable bundles for dispersed system bays may be routed across the subfloor or in the overhead ceiling space. If you are not allowed access under the floor or to the ceiling routing space, ensure that the customer has installed the cable bundles under the correct floor or ceiling tiles, and has retained the protective packaging on the cable connectors.

Hardware acclimation times

Units must acclimate to the operating environment before applying power. This requires the unpackaged system or component to reside in the operating environment for up to 16 hours in order to thermally stabilize and prevent condensation.

Transit/storage environment		Operating environment temperature	Acclimation time
Temperature	Humidity		
Nominal 68-72°F (20-22°C)	Nominal 40-55% RH	Nominal 68-72°F (20-22°C) 40-55% RH	0-1 hour
Cold <68°F (20°C)	Dry <30% RH	<86°F (30°C)	4 hours
Cold <68°F (20°C)	Damp ≥30% RH	<86°F (30°C)	4 hours
Hot >72°F (22°C)	Dry <30% RH	<86°F (30°C)	4 hours
Hot >72°F (22°C)	Humid 30-45% RH	<86°F (30°C)	4 hours
	Humid 45-60% RH	<86°F (30°C)	8 hours
	Humid ≥60% RH	<86°F (30°C)	16 hours
Unknown		<86°F (30°C)	16 hours

- If there are signs of condensation after the recommended acclimation time has passed, allow an additional eight (8) hours to stabilize.
- Systems and components must not experience changes in temperature and humidity that are likely to cause condensation to form on or in that system or component. Do not exceed the shipping and storage temperature gradient of 45°F/hr (25°C/hr).

PART 1

R640 Procedures

Installation procedures for VxFlex Ready Node R640 servers

Chapter 2, "R640 Equipment Installation"

Chapter 3, "Install AC Power Cables"

Chapter 4, "Install Management Network I/O Cables"

Chapter 5, "Install Data Network I/O Cables"

Chapter 6, "Update the Install Database"

CHAPTER 2

R640 Equipment Installation

This section provides information for installation of the equipment used with a VxFlex Ready Node R640 server.

- Installation of the equipment in the cabinet 20
- Installation in cabinets with single-phase power distribution 20
- Installation in cabinets with 3-phase delta power distribution 23
- Installation in cabinets with 3-phase wye power distribution 27
- Identifying the kit components 30
- Install the rails 31
- Secure the rail assemblies to the cabinet 32
- Install the system in the cabinet 33
- Install the front bezel 35
- Connect and route cords and cables 36

Installation of the equipment in the cabinet

Install equipment in the cabinet or rack. Always begin component installation at the bottom of the cabinet and work upward. Install components at the lowest available space for that component type.

Placement of the equipment in the cabinet is dependent on the type of power distribution units installed in the cabinet. Refer to the equipment stack up guidelines for each type of power distribution.

- Install the servers as described in the following sections. Most of the servers will function as VxFlex Ready Node nodes, and at least one will function as a management server. The procedures for physical installation in the rack or cabinet apply to both types. Once the servers have been installed, refer to the *VxFlex Ready Node Hardware Configuration and Operating System Installation Guide* (for your system's operating system), for server configuration and operating system installation procedures.
- Install the management switches
- Install the data switches

Installation in cabinets with single-phase power distribution

Note: Install all the equipment in the cabinet before installing and connecting the power and I/O cables.

- Install the equipment as described in Installation of the equipment in the cabinet on page 20.
- If you are installing the minimum configuration, refer to the figure and table below for minimum configurations for the equipment stack up in the cabinet.
- If you are installing the maximum configuration, refer to the figure and table below for maximum configurations for the equipment stack up in the cabinet.

Table 2 Minimum configuration in single-phase power distribution cabinets

Component Function	Description	Quantity	Cabinet U Space
Data Server	R640 Server	3	2 - 4
Management Server	Management Server	1	18
Management Switch	Customer provided 1 GbE switch	1	19
Data Switch	Customer provided 10 GbE switch	2	21 - 22

Figure 1 Cabinet stack up for a minimum configuration

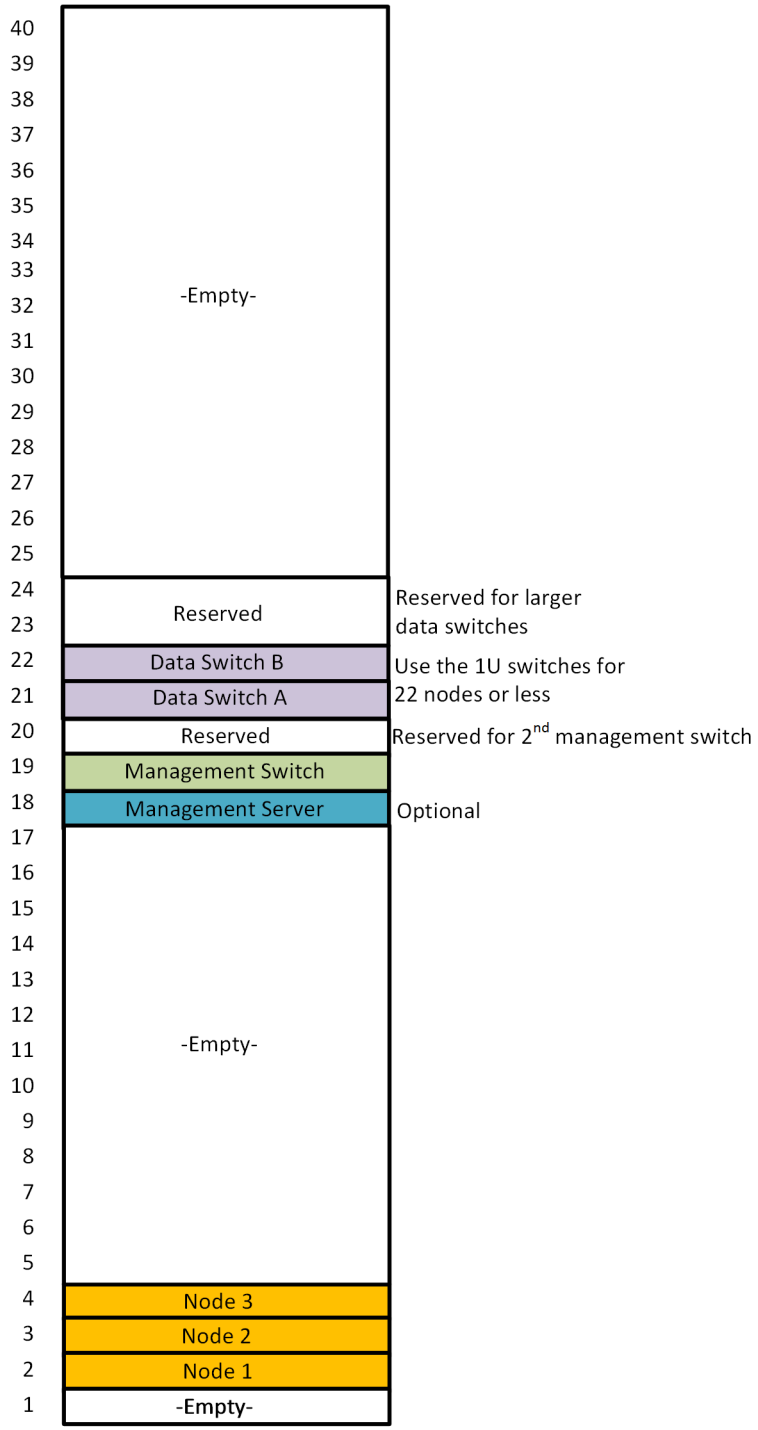

Table 3 Maximum configuration in single-phase power distribution cabinets

Component Function	Description	Quantity	Cabinet U Space
Data Server	R640 Server	32	2 - 17 and 25 - 40
Management Server	Management Server	1	18

Table 3 Maximum configuration in single-phase power distribution cabinets (continued)

Component Function	Description	Quantity	Cabinet U Space
Management Switch	Customer provided 1 GbE switch	2	19 - 20
Data Switch	Customer provided 10 GbE switch	2	21 - 24

Figure 2 Cabinet stack up for a maximum configuration

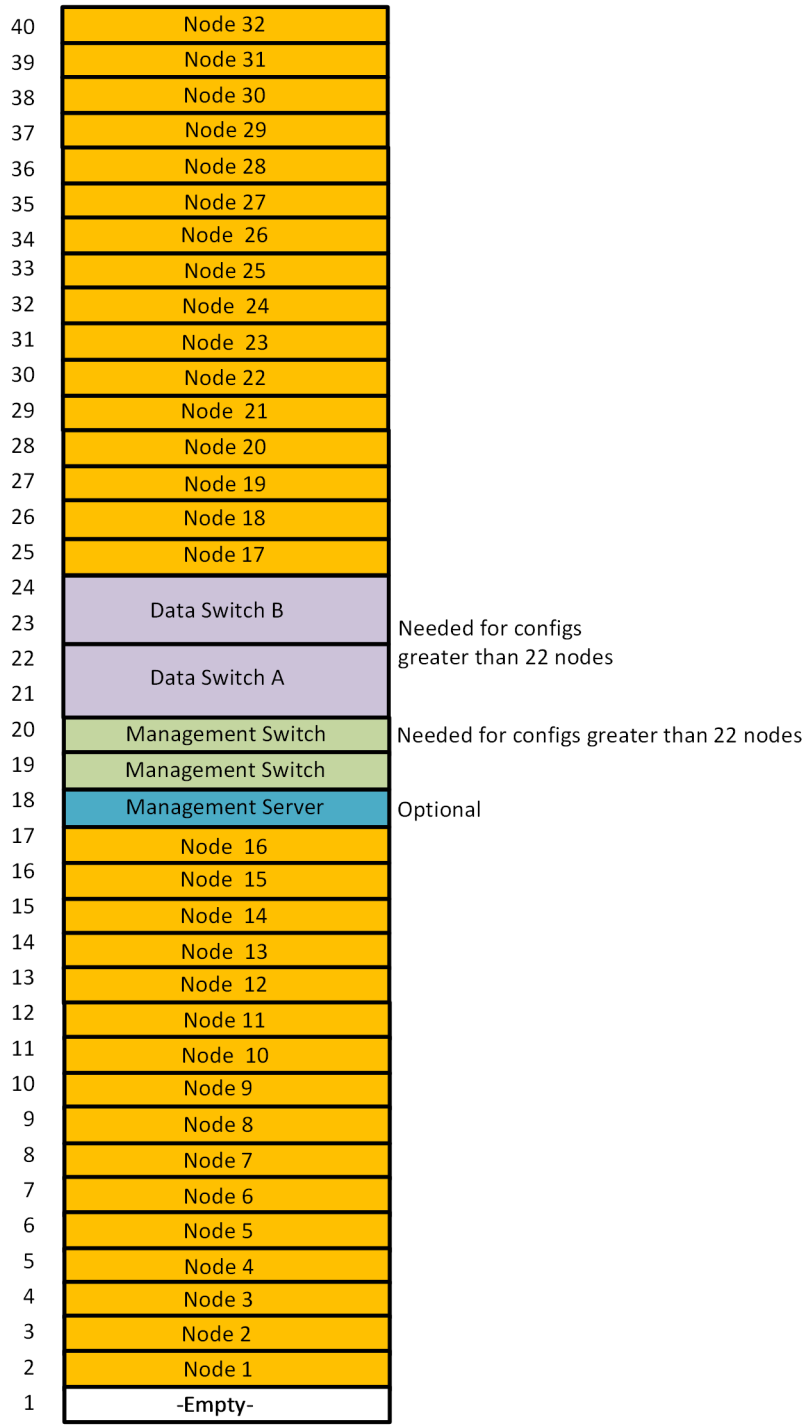

Installation in cabinets with 3-phase delta power distribution

Note: Install all the equipment in the cabinet before installing and connecting the power and I/O cables.

- Install the equipment as described in Installation of the equipment in the cabinet on page 20.
- If you are installing the minimum configuration, refer to the figure and table below for minimum configurations for the equipment stack up in the cabinet.
- If you are installing the maximum configuration, refer to the figure and table below for maximum configurations for the equipment stack up in the cabinet.

Table 4 Minimum configuration in 3-phase delta power distribution cabinets

Component Function	Description	Quantity	Cabinet U Space
Data Server	R640 Server	3	2 - 4
Management Server	Management Server	1	20
Management Switch	Customer provided 1 GbE switch	1	21
Data Switch	Customer provided 10 GbE switch	2	23-24

Figure 3 Cabinet stack up for a minimum configuration

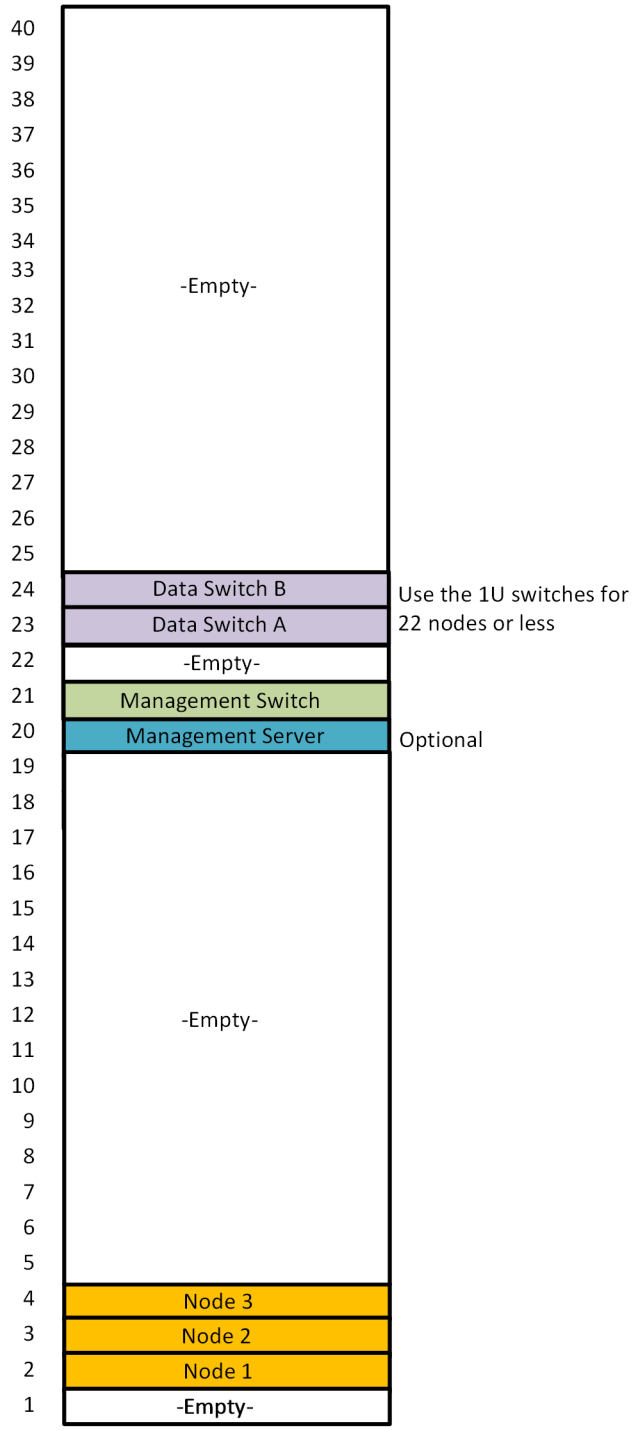

Table 5 Stack up for a maximum configuration

Component Function	Description	Quantity	Cabinet U Space
Data Server	R640 Server	32	2 - 17 and 25 - 34
Management Server	Management Server	1	18

Table 5 Stack up for a maximum configuration (continued)

Component Function	Description	Quantity	Cabinet U Space
Management Switch	Customer provided 1 GbE switch	2	19 - 20
Data Switch	Customer provided 10 GbE switch	2	21 - 24

Figure 4 Cabinet stack up for a maximum configuration

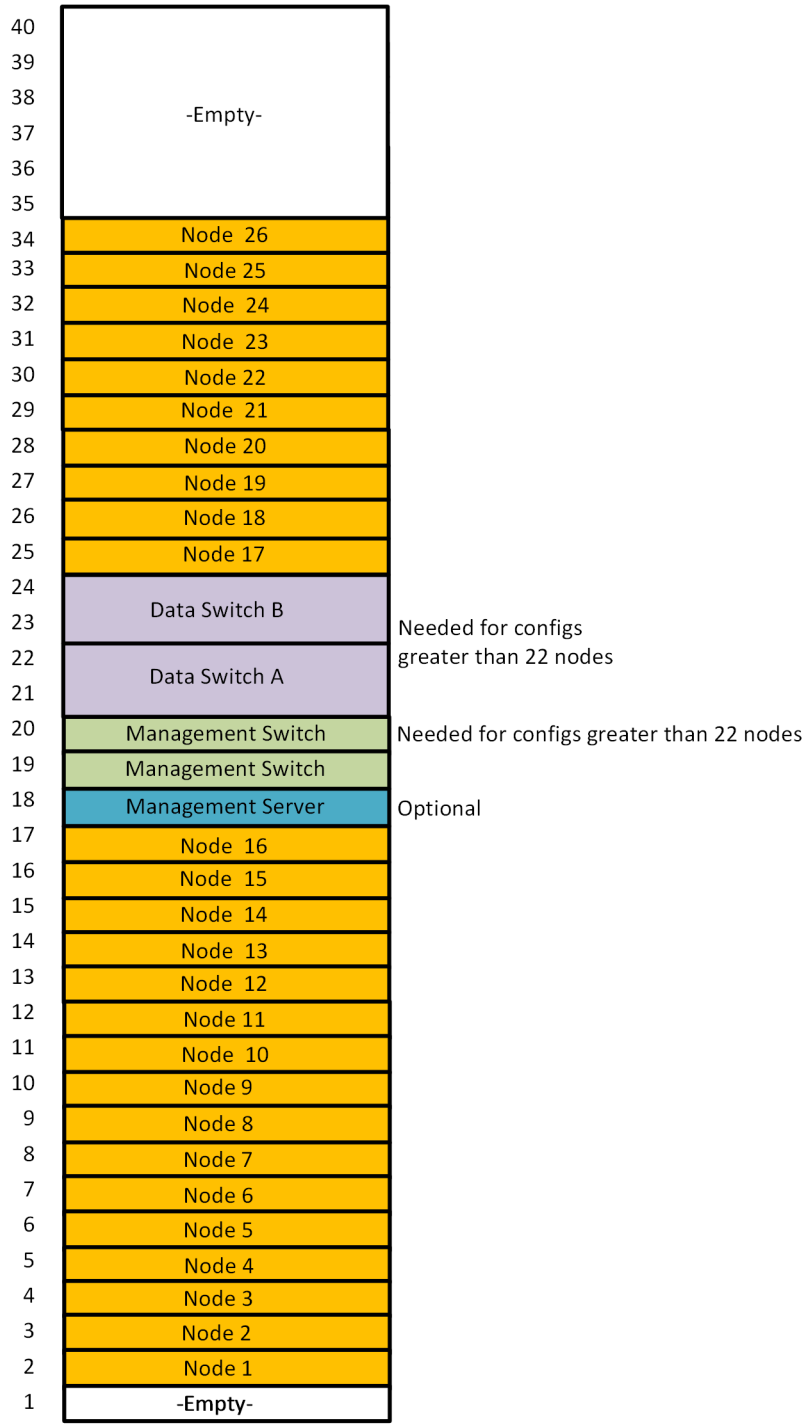

Installation in cabinets with 3-phase wye power distribution

Note: Install all the equipment in the cabinet before installing and connecting the power and I/O cables.

- Install the equipment as described in Installation of the equipment in the cabinet on page 20.
- If you are installing the minimum configuration, refer to the figure and table below for minimum configurations for the equipment stack up in the cabinet.
- If you are installing the maximum configuration, refer to the figure and table below for maximum configurations for the equipment stack up in the cabinet.

Table 6 Minimum configuration in 3-phase wye power distribution cabinets

Component Function	Description	Quantity	Cabinet U Space
Data Server	R640 Server	3	2 - 4
Management Server	Management Server	1	20
Management Switch	Customer provided 1 GbE switch	1	21
Data Switch	Customer provided 10 GbE switch	2	23-24

Figure 5 Cabinet stack up for a minimum configuration

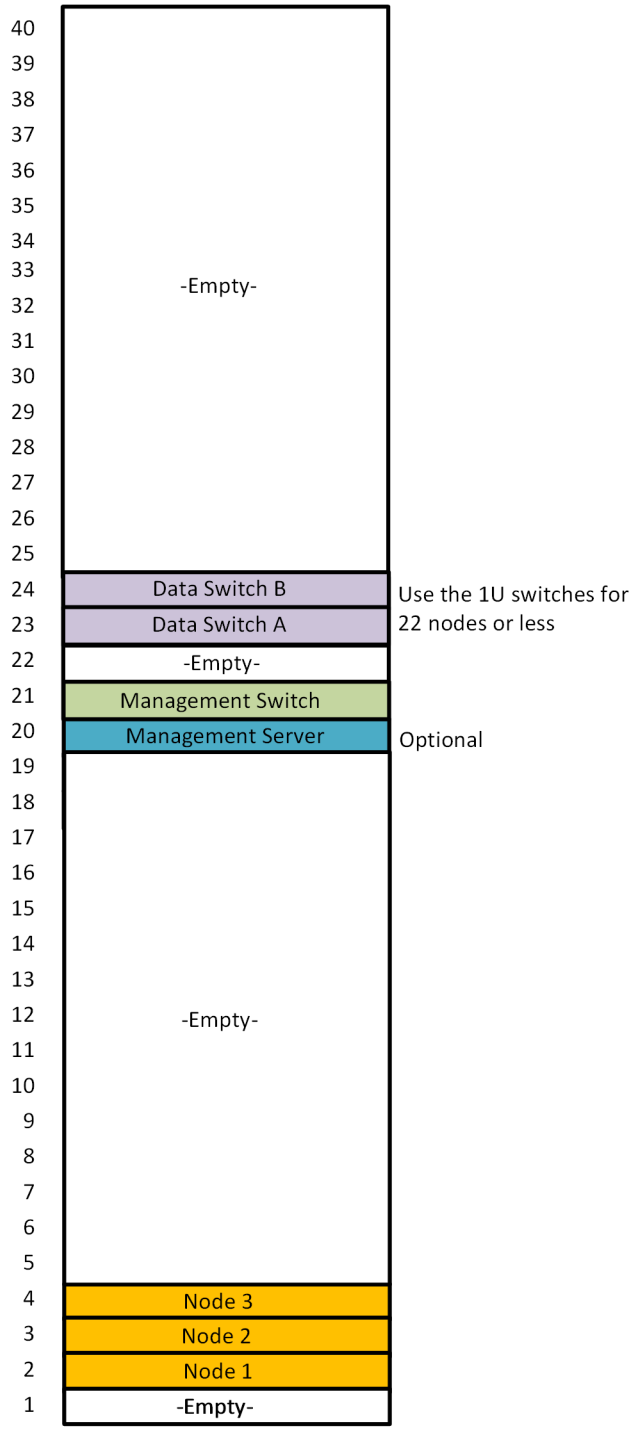

Table 7 Maximum configuration in 3-phase wye power distribution cabinets

Component Function	Description	Quantity	Cabinet U Space
Data Server	R640 Server	32	2 - 17 and 25 - 36
Management Server	Management Server	1	18

Table 7 Maximum configuration in 3-phase wye power distribution cabinets (continued)

Component Function	Description	Quantity	Cabinet U Space
Management Switch	Customer provided 1 GbE switch	2	19 - 20
Data Switch	Customer provided 10 GbE switch	2	21 - 24

Figure 6 Cabinet stack up for a maximum configuration

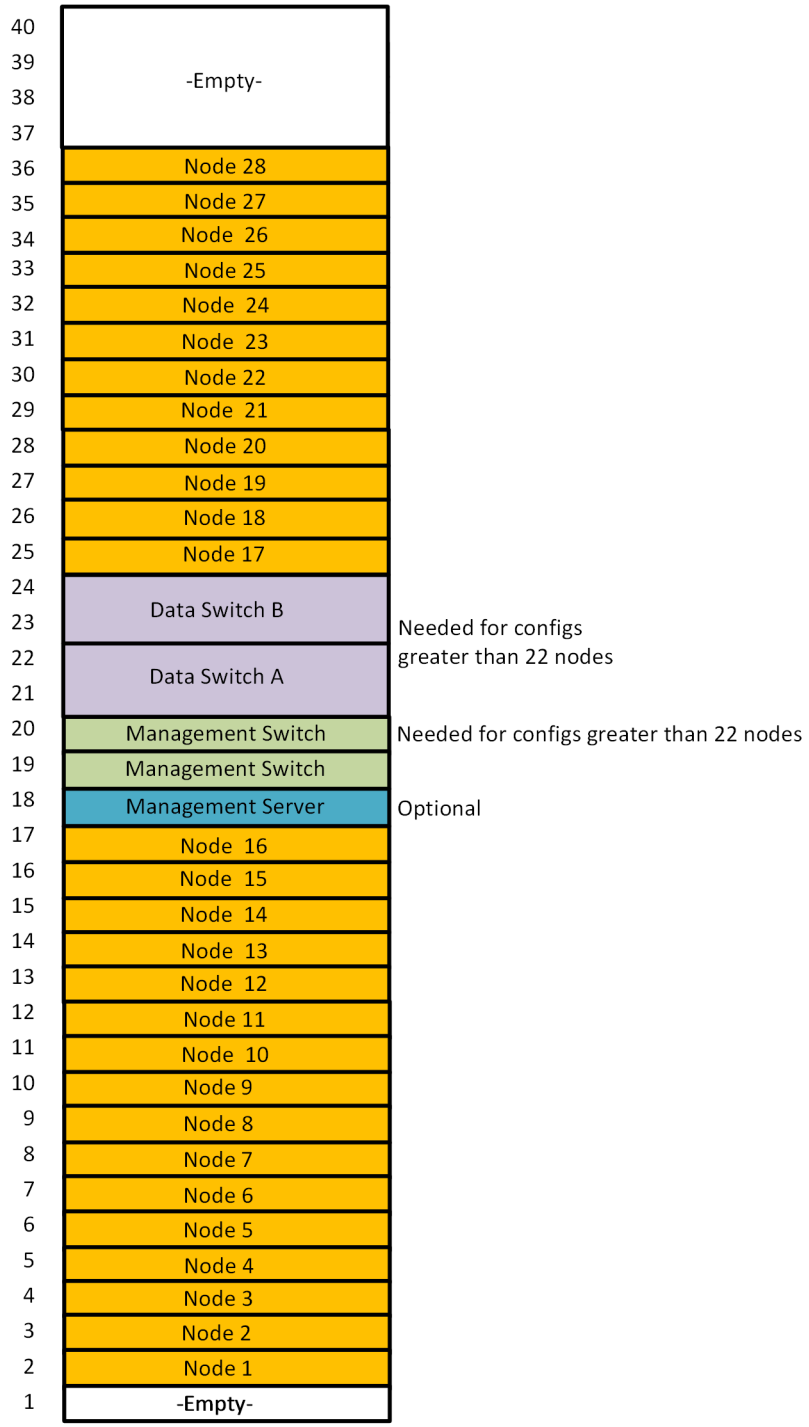

Identifying the kit components

The sliding rail assemblies allow the server to be secured in the cabinet, and extended from the cabinet so that the system cover can be removed to access the internal FRUs. The A10 sliding rail assembly (1U) is used for installation of the VxFlex Ready Node R640. The B13 sliding rail assembly (2U) is used for installation of the VxFlex Ready Node R740xd.

Figure 7 A10 sliding rail assembly - 1U systems

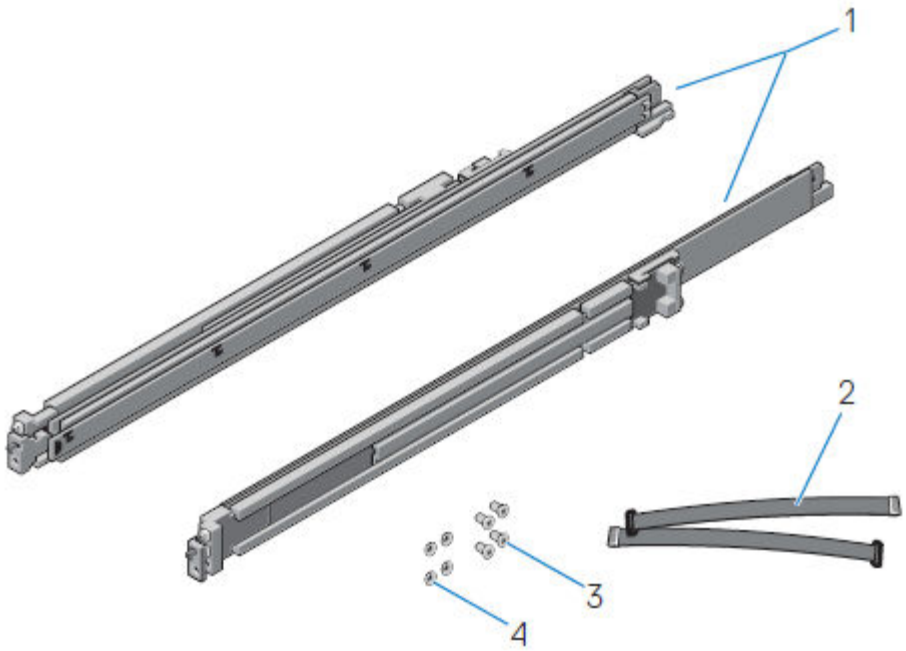

1. A10 sliding rail (2)
2. velcro strap (2)
3. screw (4)
4. washer (4)

Figure 8 B13 sliding rail assembly - 2U systems

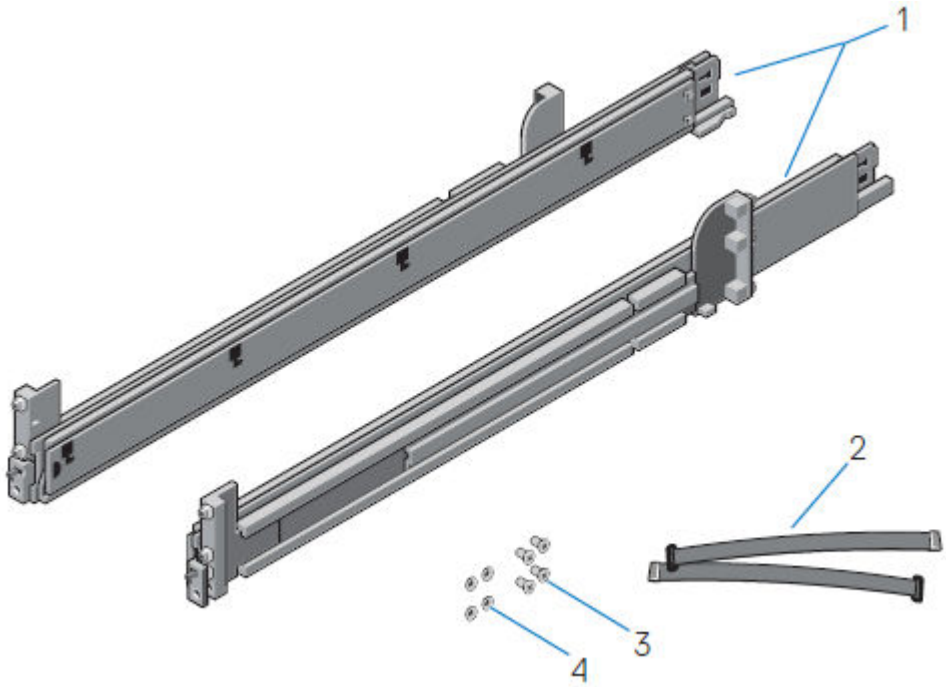

1. B13 sliding rail (2)
2. velcro strap (2)
3. screw (4)
4. washer (4)

Install the rails

About this task

The rails are labeled left and right, and cannot be interchanged. The front side of each rail is labeled **Left Front** or **Right Front** when viewed from the cabinet front.

Procedure

1. Determine where to mount the system, and use masking tape or a felt-tip pen to mark the location at the front and back of the cabinet.

   Note: Install the left rail assembly first.

2. Fully extend the rear sliding bracket of the rail.
3. Position the rail end piece labeled **Left Front** facing inward and orient the rear end piece to align with the holes on the rear cabinet flanges.
4. Push the rail straight toward the rear of the rack until the latch locks in place.

Figure 9 Installing the rear end of the rail

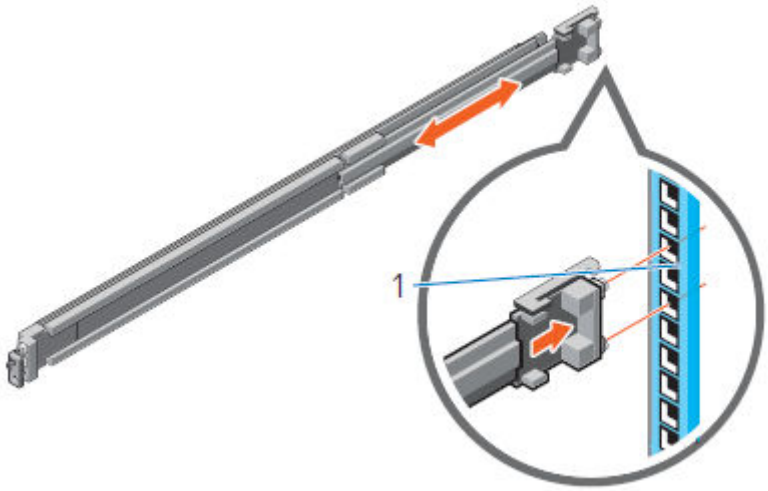

5. For the front end piece, rotate the latch outward and pull the rail forward until the pins slide into the flange, and release the latch to secure the rail in place.

   Figure 10 Installing the front end of the rail

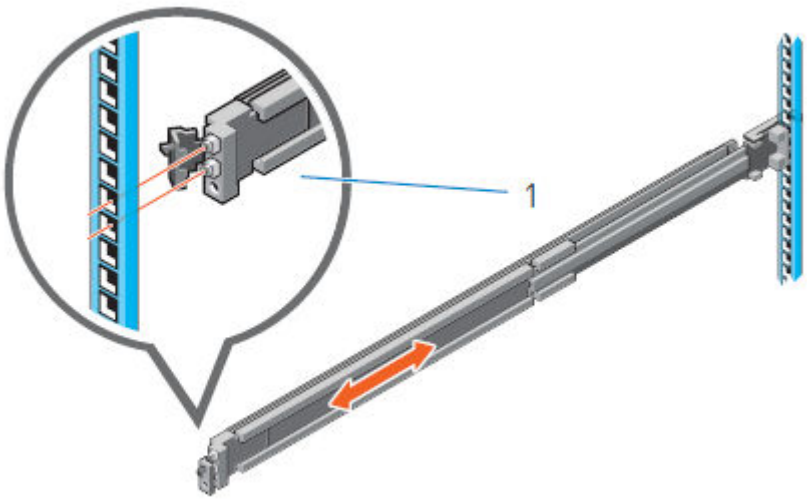

6. Repeat the preceding steps to install the right rail assembly.

Secure the rail assemblies to the cabinet

The supplied screws and washers are used to secure the rail assemblies to the front and rear of the cabinet.

About this task

Note: For square hole cabinets, install the supplied conical washer before installing the screw. For unthreaded round hole cabinets, install only the screw without the conical washer.

Procedure

1. Align the screws with the designated U spaces on the front and rear rack flanges.

   Ensure that the screw holes on the tab of the system retention bracket are seated on the designated U spaces.

2. Insert and tighten the two screws using the Phillips #2 screwdriver.

Figure 11 Installing screws

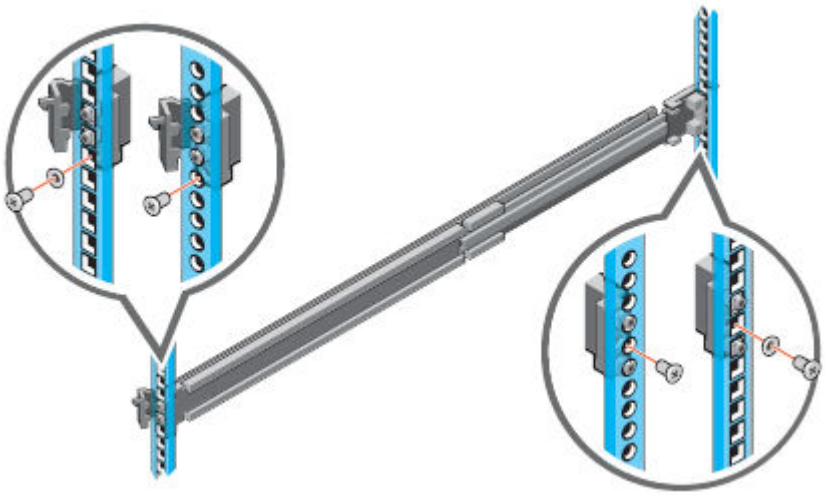

Install the system in the cabinet

This procedure is used to install the system in the cabinet.

About this task

WARNING The system is heavy and should be installed in a cabinet by two people. To avoid personal injury and/or damage to the equipment, do not attempt to install the system in a cabinet without a mechanical lift and/or help from another person.

Procedure

1. At front of the cabinet, pull the inner slide rails out of the cabinet until they lock into place.

Figure 12 Pull the inner rails out of the cabinet

2. Locate the rear rail standoff on each side of the system. Position the system above the rails and lower the rear rail standoffs into the rear J-slots on the slide assemblies.
3. Rotate the system downward until all the rail standoffs are seated in the J-slots.

Figure 13 Install the system in the rails

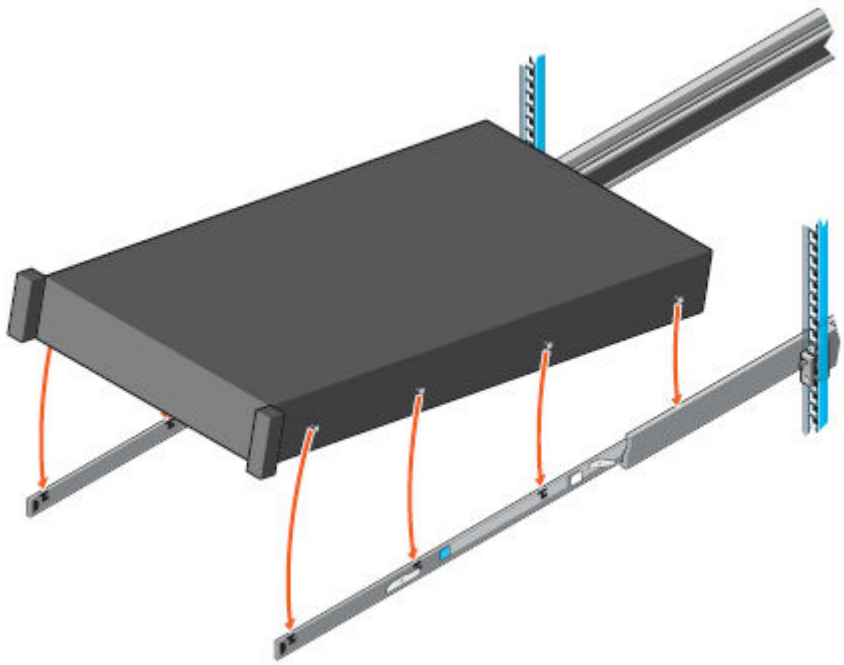

4. Push the system inward until the lock levers click into place.
5. Pull the blue slide release lock tabs forward on both rails and slide the system into the cabinet. The slam latches will engage to secure the system in the cabinet.

   Note: Ensure that the inner rail slides completely into the middle rail. The middle rail locks if the inner rail is not fully engaged.

Figure 14 Slide the system into the cabinet

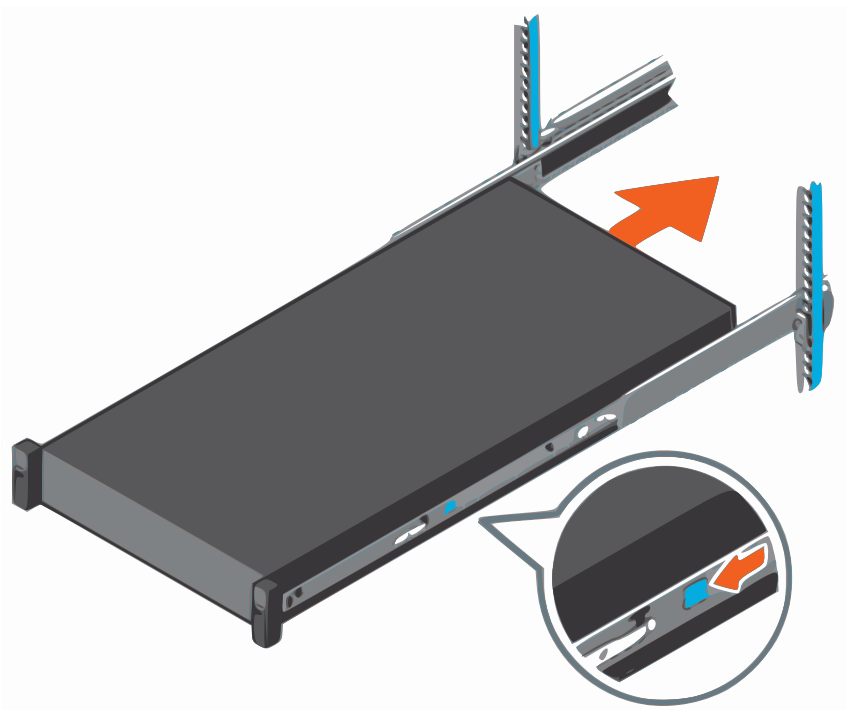

Install the front bezel

The procedure to install the front bezel with the LCD panel and the front bezel without the LCD panel is the same.

Procedure

1. Align and insert the right end of the bezel onto the system.
2. Press the release button and fit the left end of the bezel onto the system.
3. Lock the bezel by using the key.

Figure 15 Installing the front bezel on 1U system

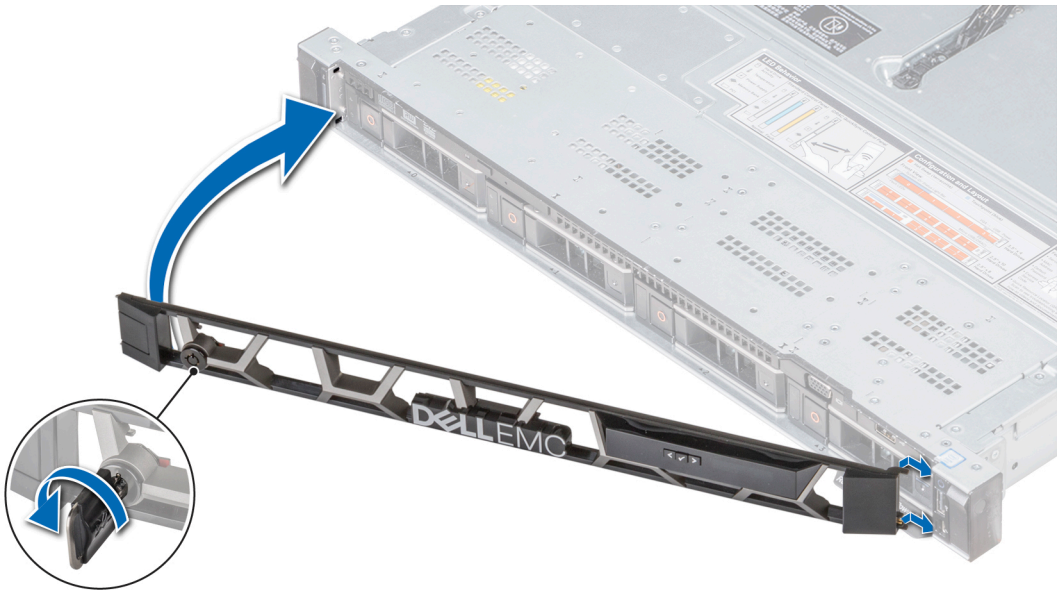

Figure 16 Installing the front bezel on 2U system'

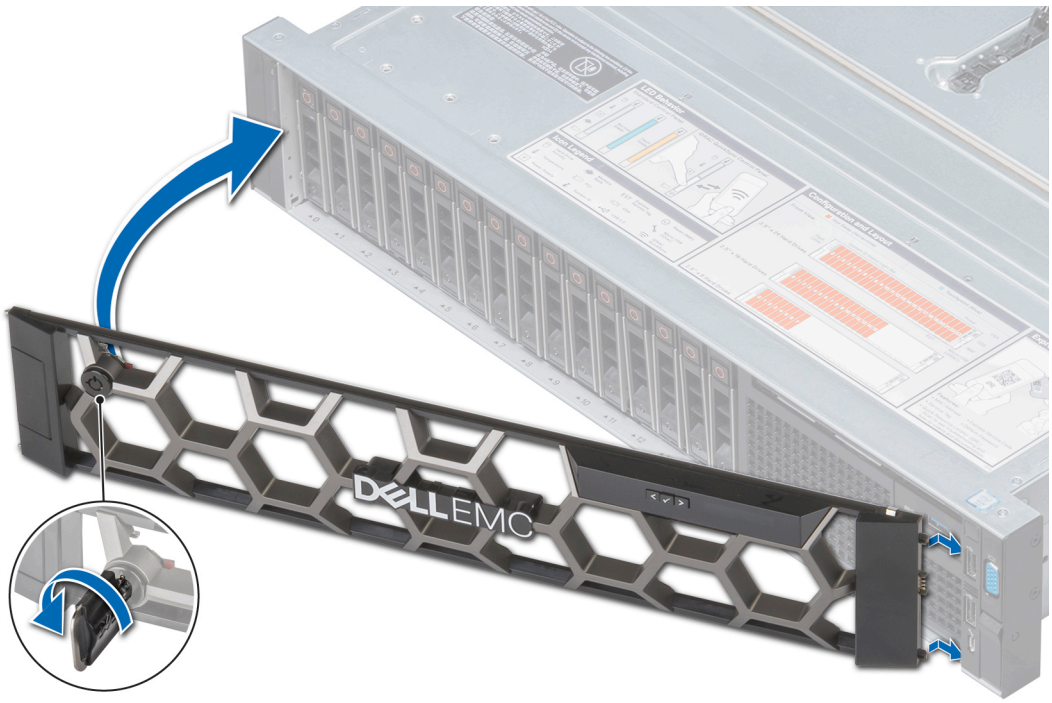

Connect and route cords and cables

Procedure

1. Connect the power cords and I/O cables as described in documentation for your system.
2. If the system uses a cable management arm (CMA), install it as described in the document shipped with the CMA.
3. If the system does not use a CMA, use the two velcro straps to route and secure cords and cables at the rear of the system:
   a. Locate the CMA bracket slots on the rear end of both the rails.
   b. Bundle the cables gently, pulling them clear of the system connectors to the left and right sides.

      Note: Ensure that there is enough space for the cables to move when you slide the system out of the rack.

   c. Thread the straps through the CMA bracket slots on each side of the system to hold the cable bundles.

      Figure 17 CMA bracket slots

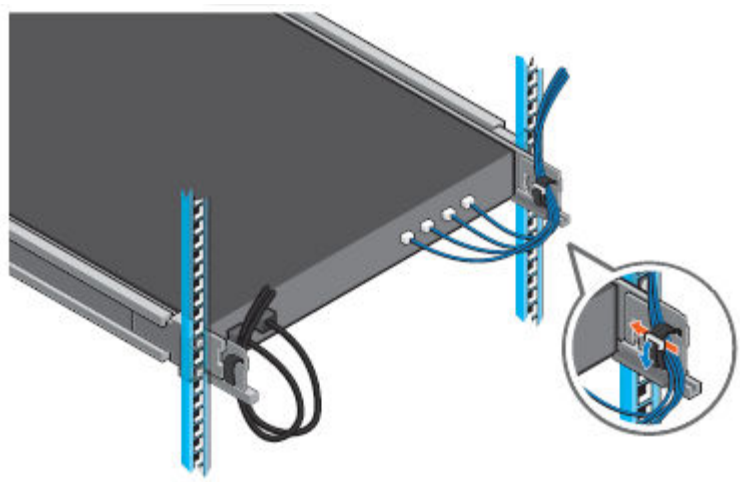

CHAPTER 3

Install AC Power Cables

This section provides sample diagrams and a connection table for installing and connecting power cables to power distribution units (PDUs) and the equipment. This information is provided as an example only, and may differ from your system setup, depending on the number of nodes and the type of PDUs used in your system.

- Guidelines for installing and connecting AC power cables 38
- Sample single-phase wiring for R640 servers 39

Guidelines for installing and connecting AC power cables

Use the following figure as reference for connectors on the rear panel of the servers and switches.

Figure 18 AC Connectors on rear panel of servers and switches

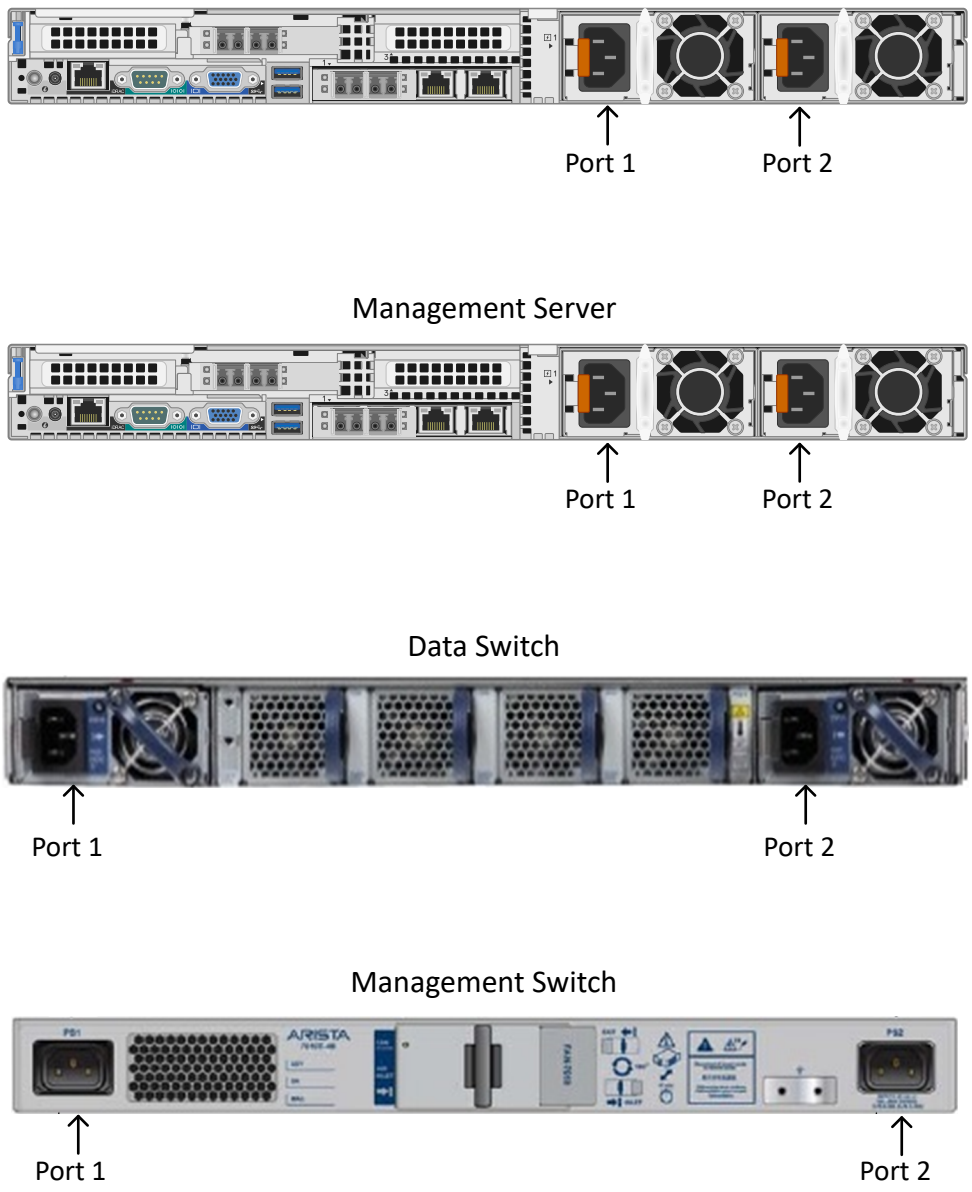

Note: As cables are installed and connected, dress and tie cables frequently so that excess slack does not interfere with routing of adjacent cables.

Sample single-phase wiring for R640 servers

A typical example for connecting power cables in racks with single-phase power distribution units is shown below.

The following diagram and table provide a typical example for connecting power cables in racks with single-phase power distribution units. In this example, PDUs with 14 power inlets are used.

Figure 19 Single-phase power distribution

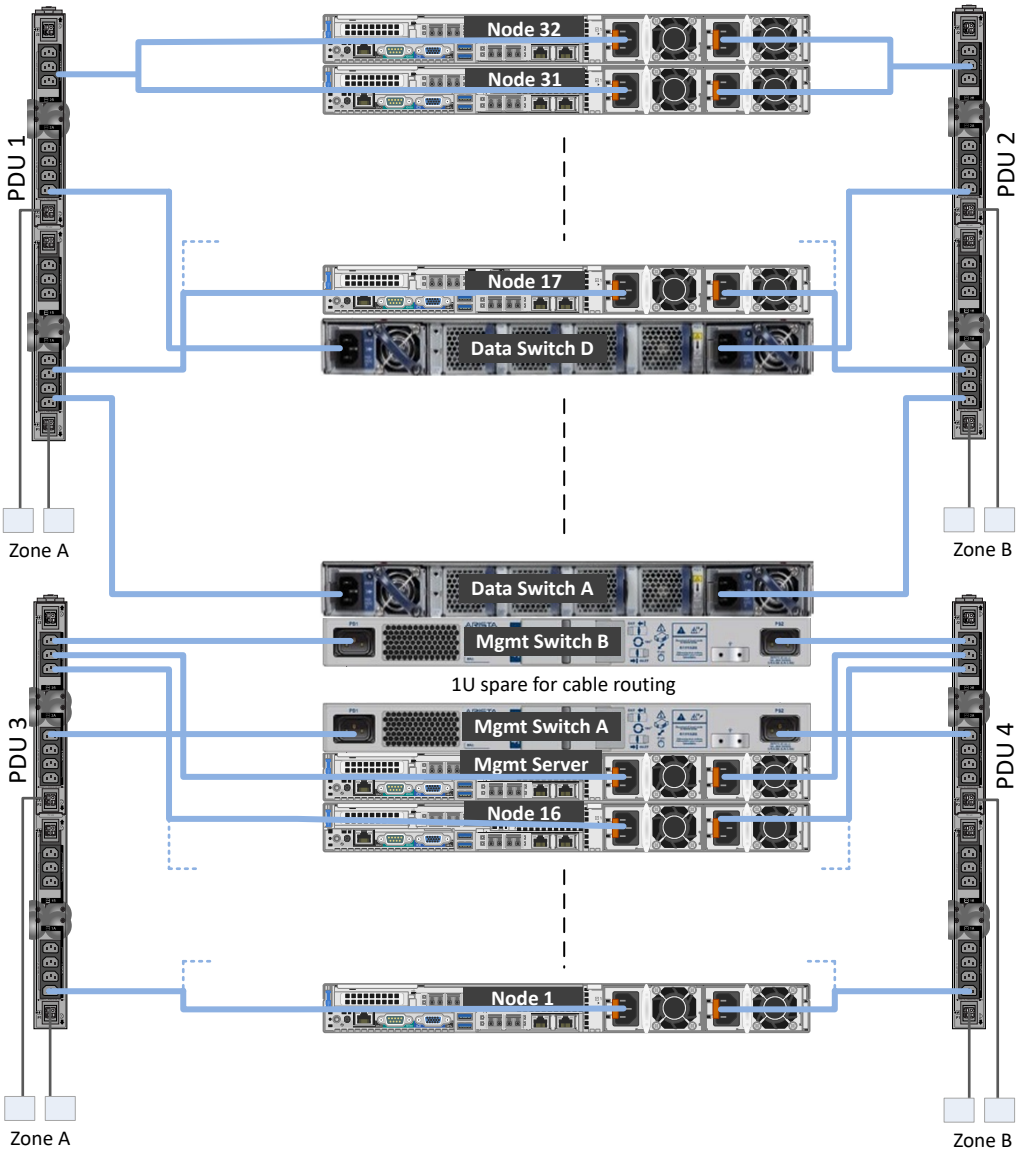

Table 8 Single-phase power distribution cabling (from top to bottom)

Source	Destination
Node 32 PSU1	PDU 1 Port 2

Table 8 Single-phase power distribution cabling (from top to bottom) (continued)

Source	Destination
Node 32 PSU2	PDU 2 Port 2
Node 31 PSU1	PDU 1 Port 2
Node 31 PSU2	PDU 2 Port 2
Node 30 PSU1	PDU 1 Port 3
Node 30 PSU2	PDU 2 Port 3
Node 29 PSU1	PDU 1 Port 3
Node 29 PSU2	PDU 2 Port 3
Node 28 PSU1	PDU 1 Port 5
Node 28 PSU2	PDU 2 Port 5
Node 27 PSU1	PDU 1 Port 5
Node 27 PSU2	PDU 2 Port 5
Node 26 PSU1	PDU 1 Port 6
Node 26 PSU2	PDU 2 Port 6
Node 25 PSU1	PDU 1 Port 6
Node 25 PSU2	PDU 2 Port 6
Data Switch D	PDU 1 Port 7
Data Switch D	PDU 2 Port 7
Node 24 PSU1	PDU 1 Port 8
Node 24 PSU2	PDU 2 Port 8
Node 23 PSU1	PDU 1 Port 8
Node 23 PSU2	PDU 2 Port 8
Node 22 PSU1	PDU 1 Port 9
Node 22 PSU2	PDU 2 Port 9
Node 21 PSU1	PDU 1 Port 9
Node 21 PSU2	PDU 2 Port 9
Data Switch C	PDU 1 Port 10
Data Switch C	PDU 2 Port 10
Node 20 PSU1	PDU 1 Port 11
Node 20 PSU2	PDU 2 Port 11
Node 19 PSU1	PDU 1 Port 11
Node 19 PSU2	PDU 2 Port 11
Node 18 PSU1	PDU 1 Port 12
Node 18 PSU2	PDU 2 Port 12

Table 8 Single-phase power distribution cabling (from top to bottom) (continued)

Source	Destination
Node 17 PSU1	PDU 1 Port 12
Node 17 PSU2	PDU 2 Port 12
Data Switch B	PDU 1 Port 13
Data Switch B	PDU 2 Port 13
Data Switch A	PDU 1 Port 14
Data Switch A	PDU 2 Port 14
Management Switch B	PDU 3 Port 1
Management Switch B	PDU 4 Port 1
Management Server	PDU 3 Port 2
Management Server	PDU 4 Port 2
Node 16 PSU1	PDU 3 Port 3
Node 16 PSU2	PDU 4 Port 3
Node 15 PSU1	PDU 3 Port 3
Node 15 PSU2	PDU 4 Port 3
Management Switch A	PDU 3 Port 4
Management Switch A	PDU 4 Port 4
Node 14 PSU1	PDU 3 Port 5
Node 14 PSU2	PDU 4 Port 5
Node 13 PSU1	PDU 3 Port 6
Node 13 PSU2	PDU 4 Port 6
Node 12 PSU1	PDU 3 Port 6
Node 12 PSU2	PDU 4 Port 6
Node 11 PSU1	PDU 3 Port 7
Node 11 PSU2	PDU 4 Port 7
Node 10 PSU1	PDU 3 Port 7
Node 10 PSU2	PDU 4 Port 7
Node 9 PSU1	PDU 3 Port 9
Node 9 PSU2	PDU 4 Port 9
Node 8 PSU1	PDU 3 Port 9
Node 8 PSU2	PDU 4 Port 9
Node 7 PSU1	PDU 3 Port 10
Node 7 PSU2	PDU 4 Port 10
Node 6 PSU1	PDU 3 Port 10

Table 8 Single-phase power distribution cabling (from top to bottom) (continued)

Source	Destination
Node 6 PSU2	PDU 4 Port 10
Node 5 PSU1	PDU 3 Port 12
Node 5 PSU2	PDU 4 Port 12
Node 4 PSU1	PDU 3 Port 13
Node 4 PSU2	PDU 4 Port 13
Node 3 PSU1	PDU 3 Port 13
Node 3 PSU2	PDU 4 Port 13
Node 2 PSU1	PDU 3 Port 14
Node 2 PSU2	PDU 4 Port 14
Node 1 PSU1	PDU 3 Port 14
Node 1 PSU2	PDU 4 Port 14

CHAPTER 4

Install Management Network I/O Cables

This section provides the diagrams and tables for installing and connecting cables for the management network.

- Guidelines for installing and connecting management network cables 44
- Management network A, nodes 1 - 16 cabling 45
- Management network A, nodes 17 - 22 cabling 46
- Management network B, nodes 23 - 32 cabling 47

Guidelines for installing and connecting management network cables

Use the following illustration as reference for console and management ports on the switches.

Figure 20 Console and management ports on switches

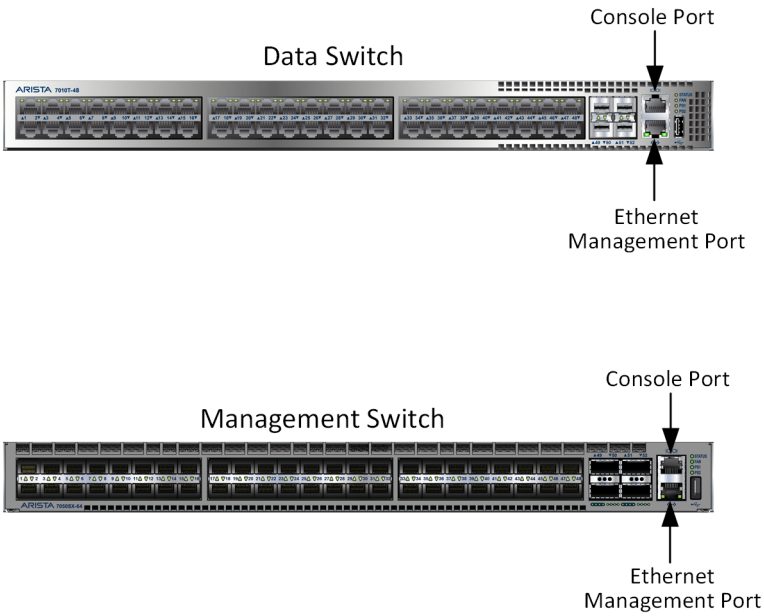

Note: As cables are installed and connected, dress and tie cables frequently so that excess slack does not interfere with routing of adjacent cables.

Refer to the management network cable diagrams applicable to your installation:

- Management network A, nodes 1 - 16 Management network A, nodes 1 - 16 cabling on page 45
- Management network B, nodes 17 - 22 Management network A, nodes 17 - 22 cabling on page 46.
- Management network B, nodes 23 - 32 Management network B, nodes 23 - 32 cabling on page 47.

Management network A, nodes 1 - 16 cabling

Use the following figure and table to connect cables for management network A, nodes 1 - 16.

Figure 21 Management A, nodes 1 - 16 cabling example

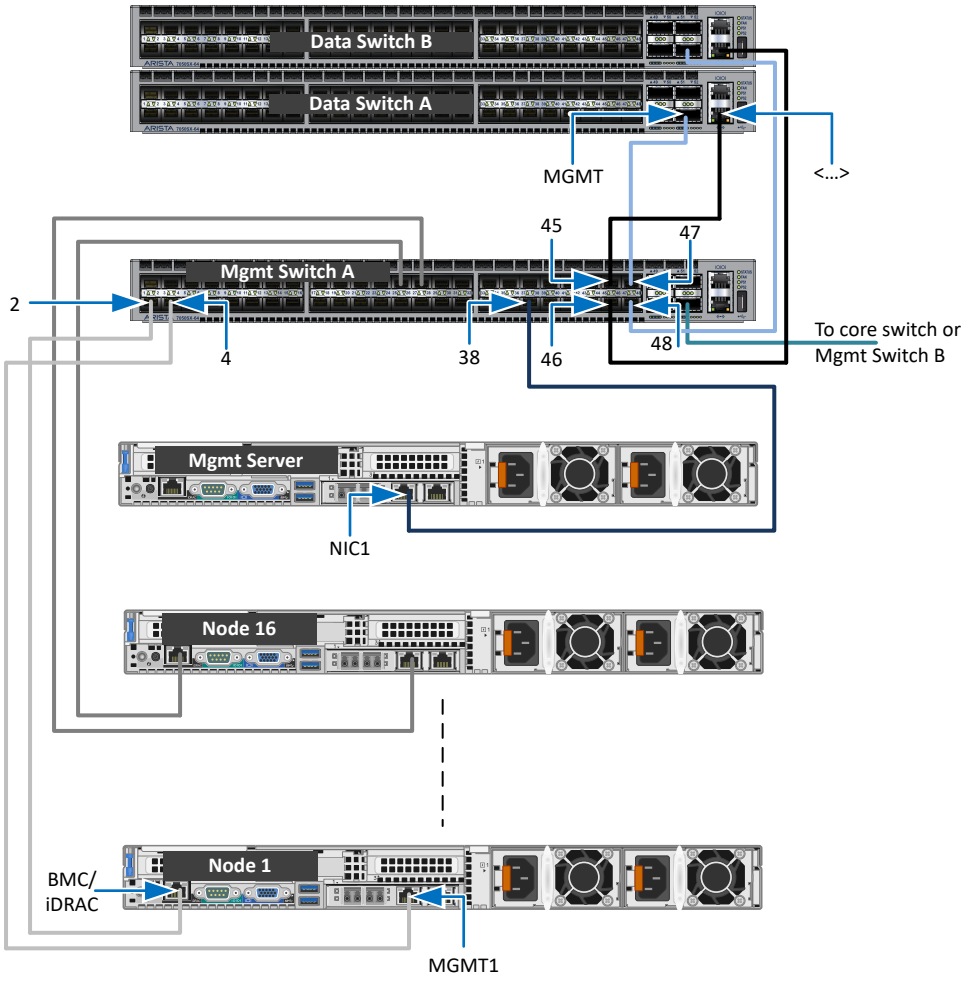

Table 9 Management A, nodes 1 -16 cabling

Source	Destination
Node 1 BMC (iDRAC)	Management SwitchA Port 2
Node 1 MGMT1	Management SwitchA Port 4
Node 2 BMC (iDRAC)	Management SwitchA Port 6
Node 2 MGMT1	Management SwitchA Port 8
Node 3 BMC (iDRAC)	Management SwitchA Port 10
Node 3 MGMT1	Management SwitchA Port 12
Node 4 BMC (iDRAC)	Management SwitchA Port 14
Node 4 MGMT1	Management SwitchA Port 16

Table 9 Management A, nodes 1 -16 cabling (continued)

Source	Destination
Node 5 BMC (iDRAC)	Management SwitchA Port 18
Node 5 MGMT1	Management SwitchA Port 20
Node 6 BMC (iDRAC)	Management SwitchA Port 22
Node 6 MGMT1	Management SwitchA Port 24
Node 7 BMC (iDRAC)	Management SwitchA Port 26
Node 7 MGMT1	Management SwitchA Port 28
Node 8 BMC (iDRAC)	Management SwitchA Port 30
Node 8 MGMT1	Management SwitchA Port 32
Node 9 BMC (iDRAC)	Management SwitchA Port 34
Node 9 MGMT1	Management SwitchA Port 36
Node 10 BMC (iDRAC)	Management SwitchA Port 1
Node 10 MGMT1	Management SwitchA Port 3
Node 11 BMC (iDRAC)	Management SwitchA Port 5
Node 11 MGMT1	Management SwitchA Port 7
Node 12 BMC (iDRAC)	Management SwitchA Port 9
Node 12 MGMT1	Management SwitchA Port 11
Node 13 BMC (iDRAC)	Management SwitchA Port 13
Node 13 MGMT1	Management SwitchA Port 15
Node 14 BMC (iDRAC)	Management SwitchA Port 17
Node 14 MGMT1	Management SwitchA Port 19
Node 15 BMC (iDRAC)	Management SwitchA Port 21
Node 15 MGMT1	Management SwitchA Port 23
Node 16 BMC (iDRAC)	Management SwitchA Port 25
Node 16 MGMT1	Management SwitchA Port 27
Data SwitchA <...> Port	Management SwitchA Port 45
Data SwitchB <...> Port	Management SwitchA Port 46
Data SwitchA MGMT Port	Management SwitchA Port 47
Data SwitchB MGMT Port	Management SwitchA Port 48
Management Server NIC1	Management SwitchA Port 38
Link to Core Switch or Management SwitchB	Management SwitchA Port 52

Management network A, nodes 17 - 22 cabling

Use the following table to connect cables for management network A, nodes 17 - 22.

Table 10 Management A, nodes 17 - 22 cabling

Source	Destination
Node 17 BMC (iDRAC)	Management SwitchA Port 29
Node 17 MGMT1	Management SwitchA Port 31
Node 18 BMC (iDRAC)	Management SwitchA Port 33
Node 18 MGMT1	Management SwitchA Port 35
Node 19 BMC (iDRAC)	Management SwitchA Port 37
Node 19 MGMT1	Management SwitchA Port 39
Node 20 BMC (iDRAC)	Management SwitchA Port 41
Node 20 MGMT1	Management SwitchA Port 43
Node 21 BMC (iDRAC)	Management SwitchA Port 38
Node 21 MGMT1	Management SwitchA Port 40
Node 22 BMC (iDRAC)	Management SwitchA Port 42
Node 22 MGMT1	Management SwitchA Port 44

Management network B, nodes 23 - 32 cabling

Use the following table to connect cables for the management network B, nodes 23 - 32.

Table 11 Management B, nodes 23 -32 cabling

Source	Destination
Node 23 BMC (iDRAC)	Management SwitchB Port 2
Node 23 MGMT1	Management SwitchB Port 4
Node 24 BMC (iDRAC)	Management SwitchB Port 6
Node 24 MGMT1	Management SwitchB Port 8
Node 25 BMC (iDRAC)	Management SwitchB Port 10
Node 25 MGMT1	Management SwitchB Port 12
Node 26 BMC (iDRAC)	Management SwitchB Port 14
Node 26 MGMT1	Management SwitchB Port 16
Node 27 BMC (iDRAC)	Management SwitchB Port 18
Node 27 MGMT1	Management SwitchB Port 20
Node 28 BMC (iDRAC)	Management SwitchB Port 1
Node 28 MGMT1	Management SwitchB Port 3
Node 29 BMC (iDRAC)	Management SwitchB Port 5
Node 29 MGMT1	Management SwitchB Port 7
Node 30 BMC (iDRAC)	Management SwitchB Port 9

Table 11 Management B, nodes 23 -32 cabling (continued)

Source	Destination
Node 30 MGMT1	Management SwitchB Port 11
Node 31 BMC (iDRAC)	Management SwitchB Port 13
Node 31 MGMT1	Management SwitchB Port 15
Node 32 BMC (iDRAC)	Management SwitchB Port 17
Node 32 MGMT1	Management SwitchB Port 19
Data SwitchC MGMT Port	Management SwitchB Port 47
Data SwitchD MGMT Port	Management SwitchB Port 48
Management Server NIC1	Management SwitchB Port 48
Link to Core Switch or Management SwitchA	Management SwitchB Port 52

CHAPTER 5

Install Data Network I/O Cables

This section provides the diagrams and tables for installing and connecting cables for the data network.

- Data network A, nodes 1 - 22 cabling example 50
- Data network B, nodes 1 - 22 cabling example 51

Data network A, nodes 1 - 22 cabling example

Use the following figure and table to connect cables for the data network A, nodes 1 - 22. The node ports referred to in this table are 10 G ports.

Note: In this example, data switch ports have been intentionally left empty. These empty ports can be used for other user-allocated purposes. If no other use is required for the empty ports, nodes may be connected to the data switches without leaving empty ports. However, ensure that on each node, each NIC is connected to a different data switch (either Data Switch A or Data Switch B), in order to prevent a single point of failure in case a switch fails.

Figure 22 Data networks A and B cabling example

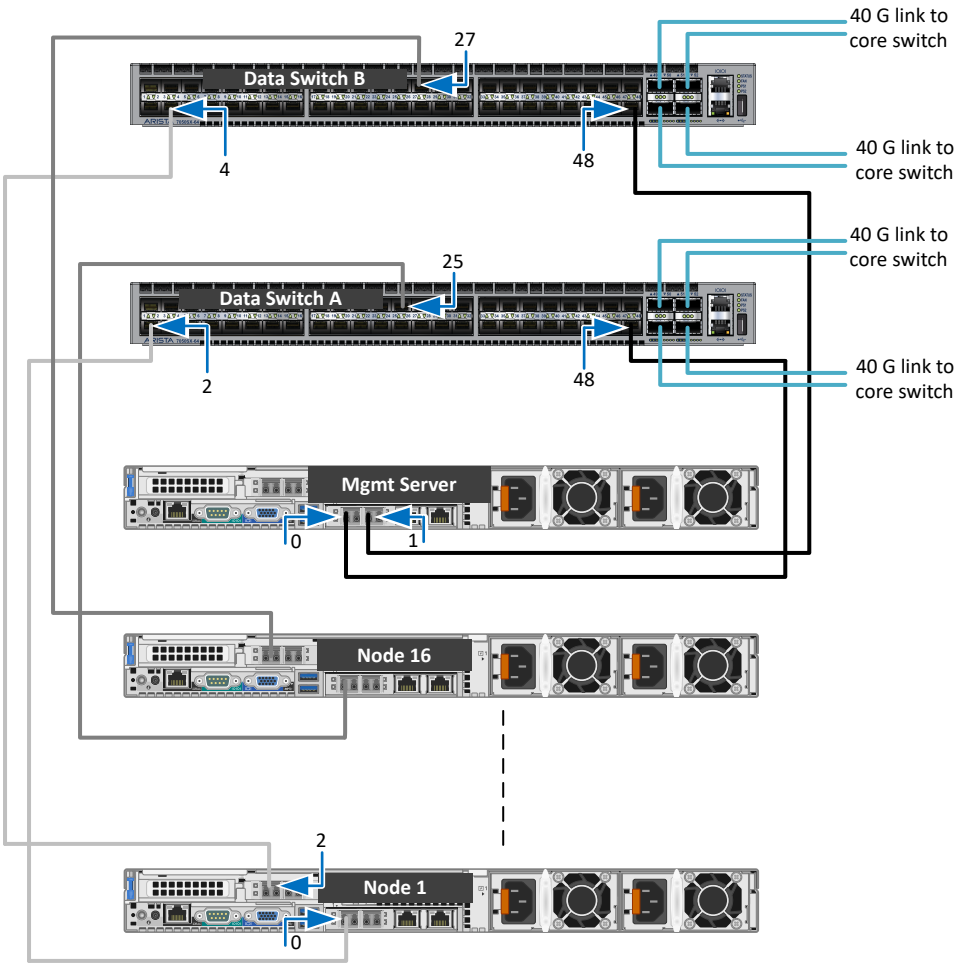

Table 12 Data A, nodes 1 - 22 cabling

Source	Destination
Node 1 Onboard Port 0	Data Switch A Port 2
Node 2 Onboard Port 0	Data Switch A Port 6
Node 3 Onboard Port 0	Data Switch A Port 10
Node 4 Onboard Port 0	Data Switch A Port 14

Table 12 Data A, nodes 1 - 22 cabling (continued)

Source	Destination
Node 5 Onboard Port 0	Data Switch A Port 18
Node 6 Onboard Port 0	Data Switch A Port 22
Node 7 Onboard Port 0	Data Switch A Port 26
Node 8 Onboard Port 0	Data Switch A Port 30
Node 9 Onboard Port 0	Data Switch A Port 34
Management Server Port 0	Data Switch A Port 48
Node 10 Onboard Port 0	Data Switch A Port 1
Node 11 Onboard Port 0	Data Switch A Port 5
Node 12 Onboard Port 0	Data Switch A Port 9
Node 13 Onboard Port 0	Data Switch A Port 13
Node 14 Onboard Port 0	Data Switch A Port 17
Node 15 Onboard Port 0	Data Switch A Port 21
Node 16 Onboard Port 0	Data Switch A Port 25
Node 17 Onboard Port 0	Data Switch A Port 29
Node 18 Onboard Port 0	Data Switch A Port 33
Node 19 Onboard Port 0	Data Switch A Port 37
Node 20 Onboard Port 0	Data Switch A Port 41
Node 21 Onboard Port 0	Data Switch A Port 38
Node 22 Onboard Port 0	Data Switch A Port 42

Data network B, nodes 1 - 22 cabling example

Use the following table to connect cables for the data network B, nodes 1 - 22. The node ports referred to in the table are 10 G ports.

Table 13 Data B, nodes 1 - 22 cabling

Source	Destination
Node 1 PCIe Port 2	Data Switch B Port 4
Node 2 PCIe Port 2	Data Switch B Port 8
Node 3 PCIe Port 2	Data Switch B Port 12
Node 4 PCIe Port 2	Data Switch B Port 16
Node 5 PCIe Port 2	Data Switch B Port 20
Node 6 PCIe Port 2	Data Switch B Port 24
Node 7 PCIe Port 2	Data Switch B Port 28

Table 13 Data B, nodes 1 - 22 cabling (continued)

Source	Destination
Node 8 PCIe Port 2	Data Switch B Port 32
Node 9 PCIe Port 2	Data Switch B Port 36
Management Server Port 1	Data Switch B Port 48
Node 10 PCIe Port 2	Data Switch B Port 3
Node 11 PCIe Port 2	Data Switch B Port 7
Node 12 PCIe Port 2	Data Switch B Port 11
Node 13 PCIe Port 2	Data Switch B Port 15
Node 14 PCIe Port 2	Data Switch B Port 19
Node 15 PCIe Port 2	Data Switch B Port 23
Node 16 PCIe Port 2	Data Switch B Port 27
Node 17 PCIe Port 2	Data Switch B Port 31
Node 18 PCIe Port 2	Data Switch B Port 35
Node 19 PCIe Port 2	Data Switch B Port 39
Node 20 PCIe Port 2	Data Switch B Port 43
Node 21 PCIe Port 2	Data Switch B Port 40
Node 22 PCIe Port 2	Data Switch B Port 44

CHAPTER 6

Update the Install Database

This section provides information to update the install database after all installation and configuration work is completed.

- Update the install database 54

Update the install database

After all work is complete, use this procedure to update the install database.

Procedure

1. Open a web browser and navigate to the Dell EMC Business Services website at http://emc.force.com/BusinessServices.
2. In the **Post Sales** area, click **Install Base Group**.
3. Complete and submit the form.

PART 2

R740XD Procedures

Installation procedures for VxFlex Ready Node R740XD servers

Chapter 7, "R740XD Configuration Equipment Installation"

Chapter 8, "Wiring Diagrams for a R740XD Configuration"

Chapter 9, "Update the Install Database"

CHAPTER 7

R740XD Configuration Equipment Installation

This section provides information for installation of the equipment used with a VxFlex Ready Node R740XD server.

- Installation of the equipment in the cabinet 58
- R740xd configuration installation guidelines 58
- Identifying the kit components 59
- Install the rails 61
- Secure the rail assemblies to the cabinet 62
- Install the system in the cabinet 63
- Install the front bezel 65
- Connect and route cords and cables 66

Installation of the equipment in the cabinet

Install equipment in the cabinet or rack. Always begin component installation at the bottom of the cabinet and work upward. Install components at the lowest available space for that component type.

Placement of the equipment in the cabinet is dependent on the type of power distribution units installed in the cabinet. Refer to the equipment stack up guidelines for each type of power distribution.

- Install the servers as described in the following sections. Most of the servers will function as VxFlex Ready Node nodes, and at least one will function as a management server. The procedures for physical installation in the rack or cabinet apply to both types. Once the servers have been installed, refer to the *VxFlex Ready Node Hardware Configuration and Operating System Installation Guide* (for your system's operating system), for server configuration and operating system installation procedures.
- Install the management switches
- Install the data switches

R740xd configuration installation guidelines

Minimum and maximum stack up configurations are provided in this topic.

Assuming installation is into an empty rack, always begin component installation at the bottom of the cabinet and work upward. Install components at the lowest available space for that component type.

If you are installing the minimum configuration, the stack up will be as follows:

Table 14 Stack up for a minimum configuration

Component Function	Description	Quantity	Cabinet U Space
Data Server	R740xd Server	3	2 - 7
Management Server	Management Server	1	20
Management Switch	Customer provided 1 GbE switch	1	21
Data Switch	Customer provided 10 GbE switch	2	23 - 24

If you are installing the maximum configuration, the stack up will be as follows:

Table 15 Stack up for a maximum configuration

Component Function	Description	Quantity	Cabinet U Space
Data Server	R740xd Server	17	2 - 19 and 25 - 40
Management Server	Management Server	1	20
Management Switch	Customer provided 1 GbE switch	1	21
Data Switch	Customer provided 10 GbE switch	2	23 - 24

The following illustration represents the maximum R740xd configuration.

Figure 23 Cabinet stack up for R740xd servers

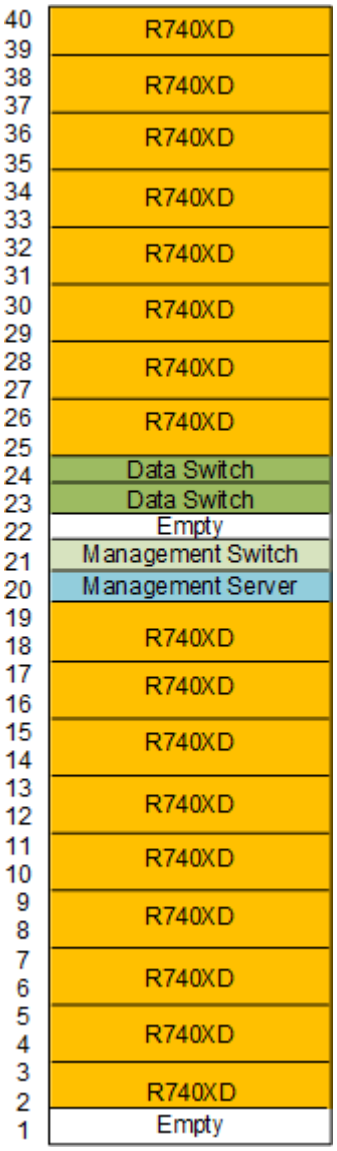

Identifying the kit components

The sliding rail assemblies allow the server to be secured in the cabinet, and extended from the cabinet so that the system cover can be removed to access the internal FRUs. The A10 sliding rail assembly (1U) is used for installation of the VxFlex Ready Node R640. The B13 sliding rail assembly (2U) is used for installation of the VxFlex Ready Node R740xd.

Figure 24 A10 sliding rail assembly - 1U systems

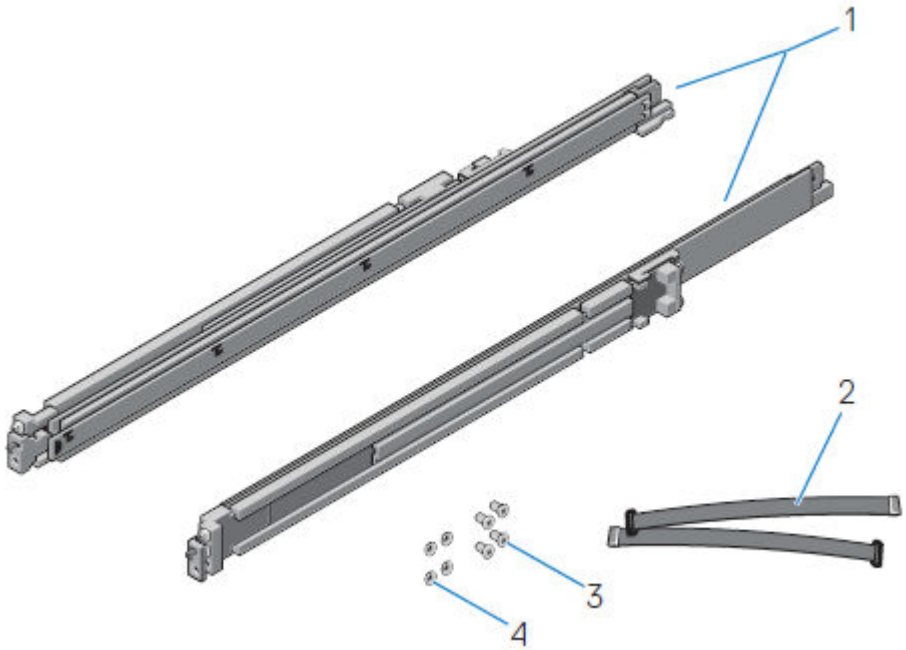

1. A10 sliding rail (2)
2. velcro strap (2)
3. screw (4)
4. washer (4)

Figure 25 B13 sliding rail assembly - 2U systems

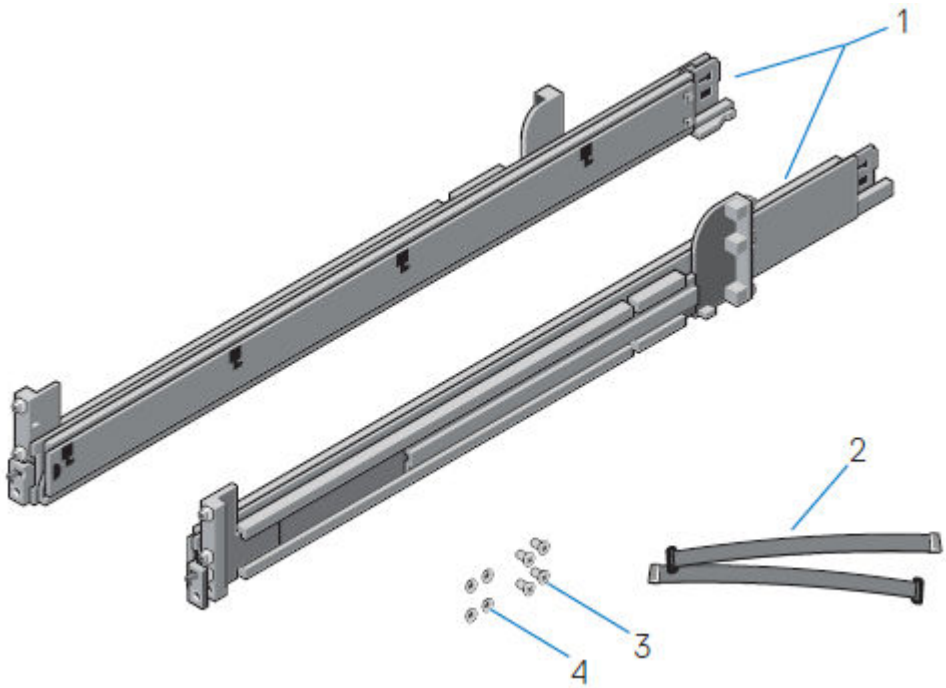

1. B13 sliding rail (2)
2. velcro strap (2)

Figure 25 B13 sliding rail assembly - 2U systems (continued)

3. screw (4)
4. washer (4)

Install the rails

About this task

The rails are labeled left and right, and cannot be interchanged. The front side of each rail is labeled **Left Front** or **Right Front** when viewed from the cabinet front.

Procedure

1. Determine where to mount the system, and use masking tape or a felt-tip pen to mark the location at the front and back of the cabinet.

   Note: Install the left rail assembly first.

2. Fully extend the rear sliding bracket of the rail.
3. Position the rail end piece labeled **Left Front** facing inward and orient the rear end piece to align with the holes on the rear cabinet flanges.
4. Push the rail straight toward the rear of the rack until the latch locks in place.

   Figure 26 Installing the rear end of the rail

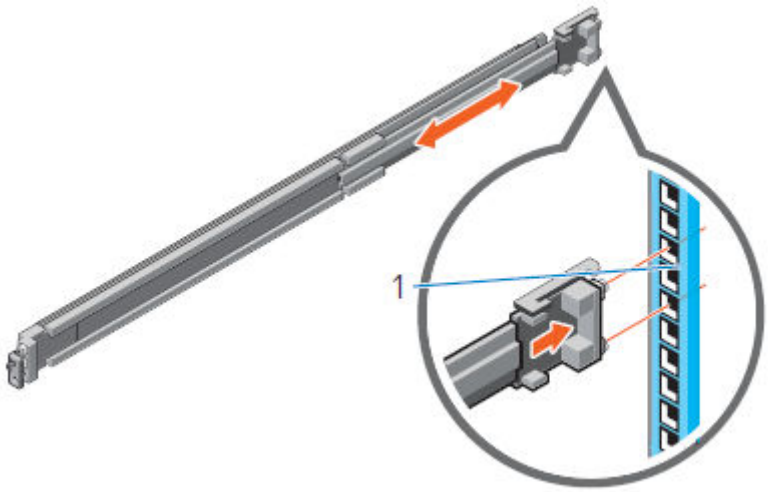

5. For the front end piece, rotate the latch outward and pull the rail forward until the pins slide into the flange, and release the latch to secure the rail in place.

Figure 27 Installing the front end of the rail

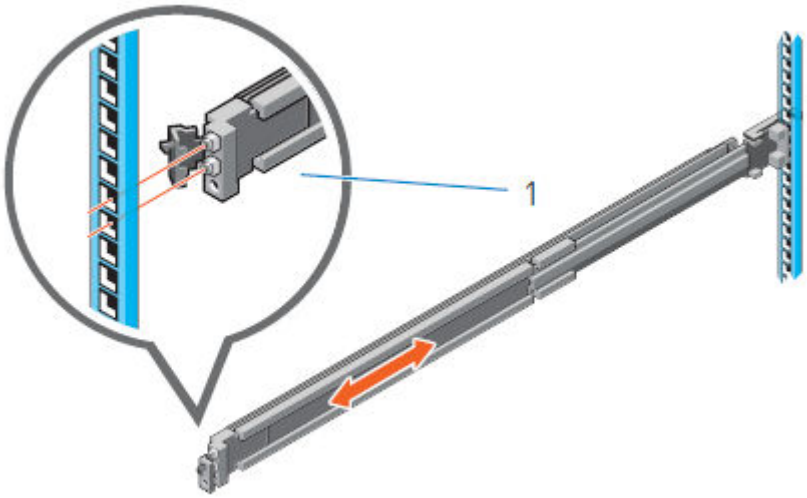

6. Repeat the preceding steps to install the right rail assembly.

Secure the rail assemblies to the cabinet

The supplied screws and washers are used to secure the rail assemblies to the front and rear of the cabinet.

About this task

Note: For square hole cabinets, install the supplied conical washer before installing the screw. For unthreaded round hole cabinets, install only the screw without the conical washer.

Procedure

1. Align the screws with the designated U spaces on the front and rear rack flanges.

   Ensure that the screw holes on the tab of the system retention bracket are seated on the designated U spaces.

2. Insert and tighten the two screws using the Phillips #2 screwdriver.

   Figure 28 Installing screws

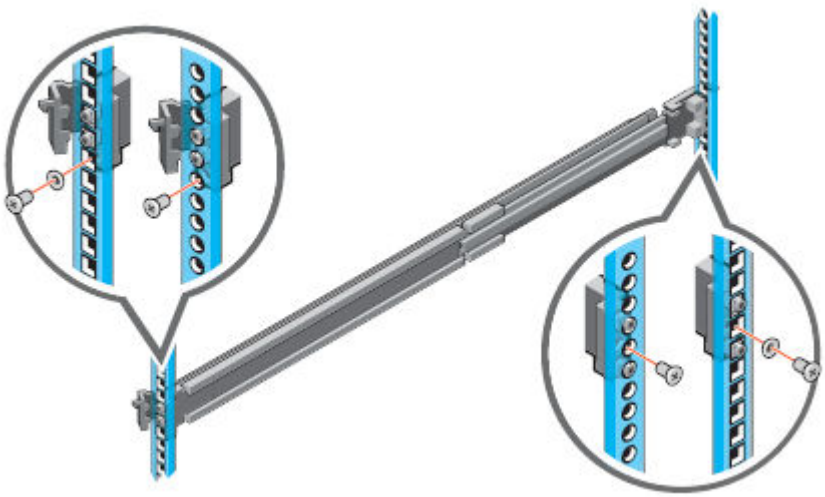

Install the system in the cabinet

This procedure is used to install the system in the cabinet.

About this task

WARNING The system is heavy and should be installed in a cabinet by two people. To avoid personal injury and/or damage to the equipment, do not attempt to install the system in a cabinet without a mechanical lift and/or help from another person.

Procedure

1. At front of the cabinet, pull the inner slide rails out of the cabinet until they lock into place.

   Figure 29 Pull the inner rails out of the cabinet

2. Locate the rear rail standoff on each side of the system. Position the system above the rails and lower the rear rail standoffs into the rear J-slots on the slide assemblies.
3. Rotate the system downward until all the rail standoffs are seated in the J-slots.

Figure 30 Install the system in the rails

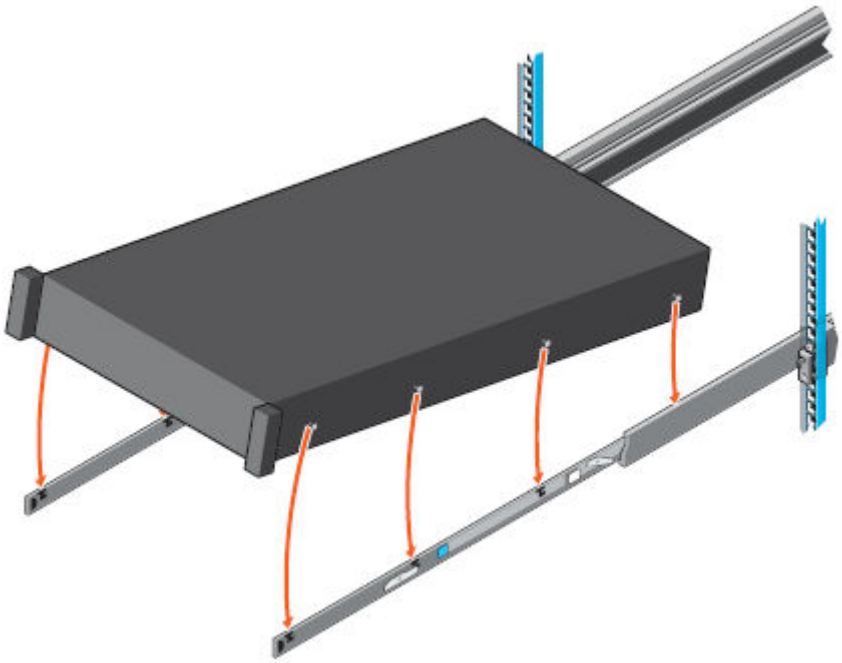

4. Push the system inward until the lock levers click into place.
5. Pull the blue slide release lock tabs forward on both rails and slide the system into the cabinet. The slam latches will engage to secure the system in the cabinet.

   Note: Ensure that the inner rail slides completely into the middle rail. The middle rail locks if the inner rail is not fully engaged.

Figure 31 Slide the system into the cabinet

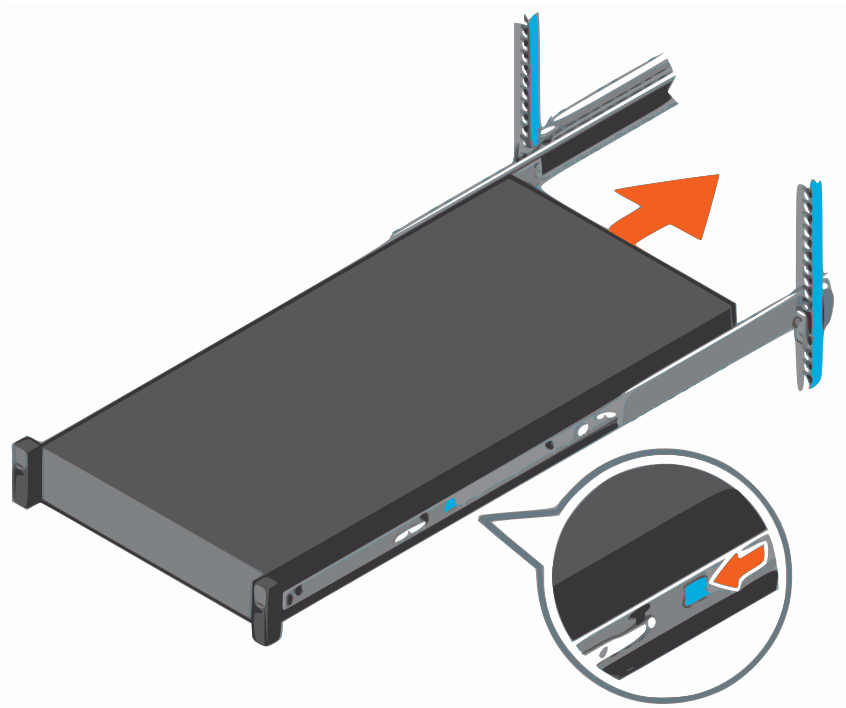

Install the front bezel

The procedure to install the front bezel with the LCD panel and the front bezel without the LCD panel is the same.

Procedure

1. Align and insert the right end of the bezel onto the system.
2. Press the release button and fit the left end of the bezel onto the system.
3. Lock the bezel by using the key.

Figure 32 Installing the front bezel on 1U system

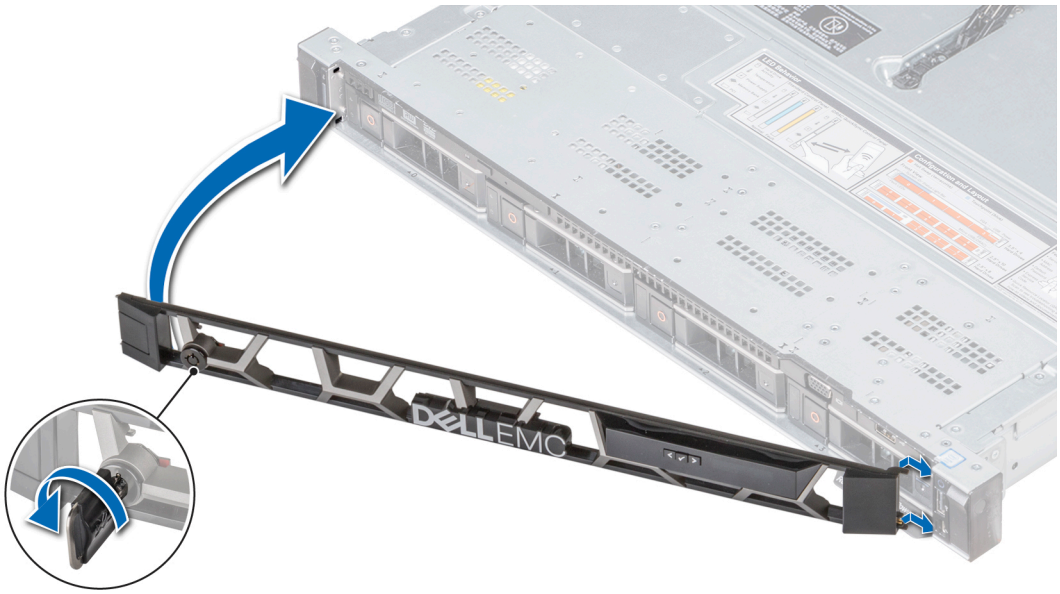

Figure 33 Installing the front bezel on 2U system'

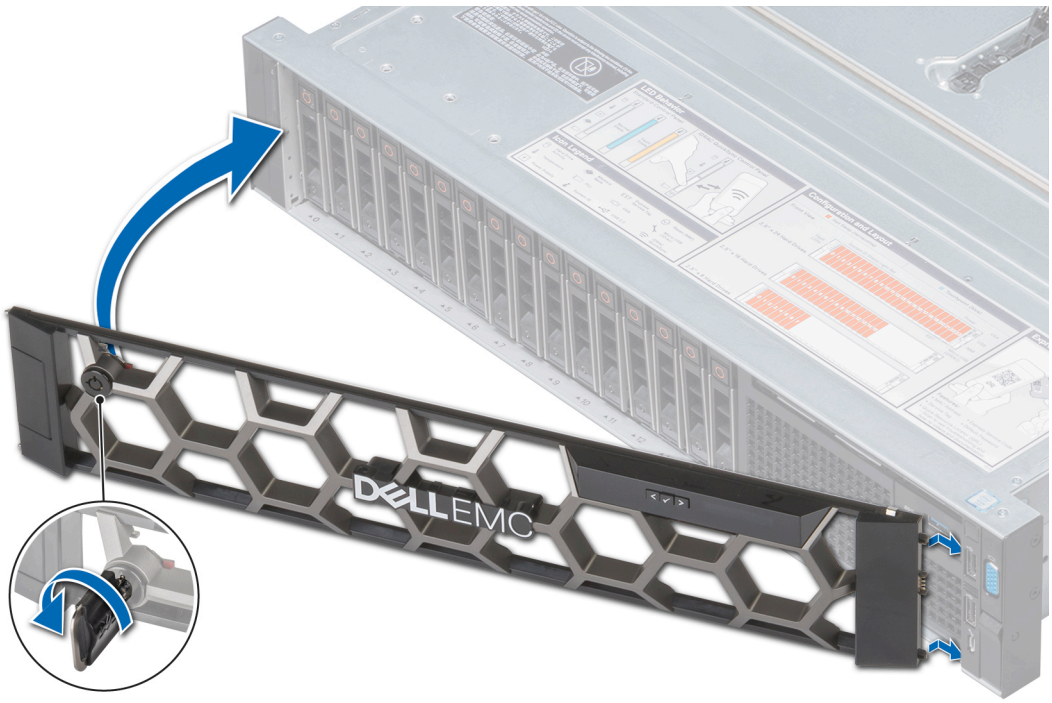

Connect and route cords and cables

Procedure

1. Connect the power cords and I/O cables as described in documentation for your system.
2. If the system uses a cable management arm (CMA), install it as described in the document shipped with the CMA.
3. If the system does not use a CMA, use the two velcro straps to route and secure cords and cables at the rear of the system:
   a. Locate the CMA bracket slots on the rear end of both the rails.
   b. Bundle the cables gently, pulling them clear of the system connectors to the left and right sides.

      Note: Ensure that there is enough space for the cables to move when you slide the system out of the rack.

   c. Thread the straps through the CMA bracket slots on each side of the system to hold the cable bundles.

      Figure 34 CMA bracket slots

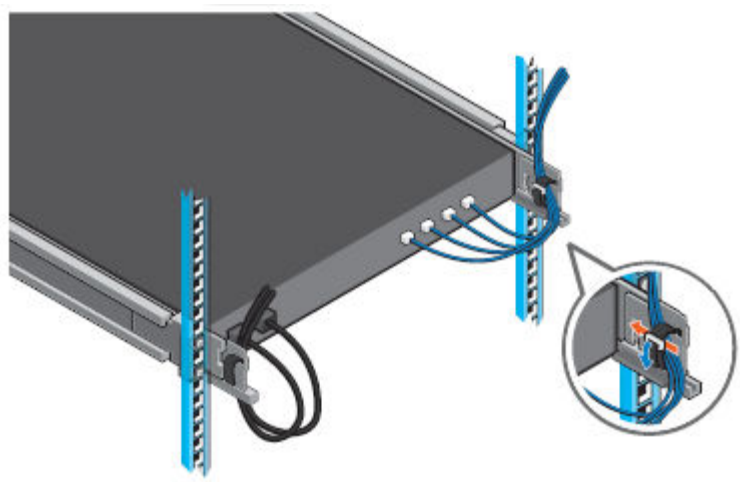

CHAPTER 8

Wiring Diagrams for a R740XD Configuration

This section provides the power, management, and data wiring diagrams for the R740XD configuration.

- Guidelines for wiring a R740XD configuration 68
- Sample single-phase wiring for R740XD servers 69
- Management network wiring for R740XD servers 72
- Data network A wiring for R740XD servers 74
- Data network B wiring for R740XD servers 76

Guidelines for wiring a R740XD configuration

Use the following figure as reference for connectors on rear panels of the servers and switches:

Figure 35 Power connectors on rear panel of servers and switches

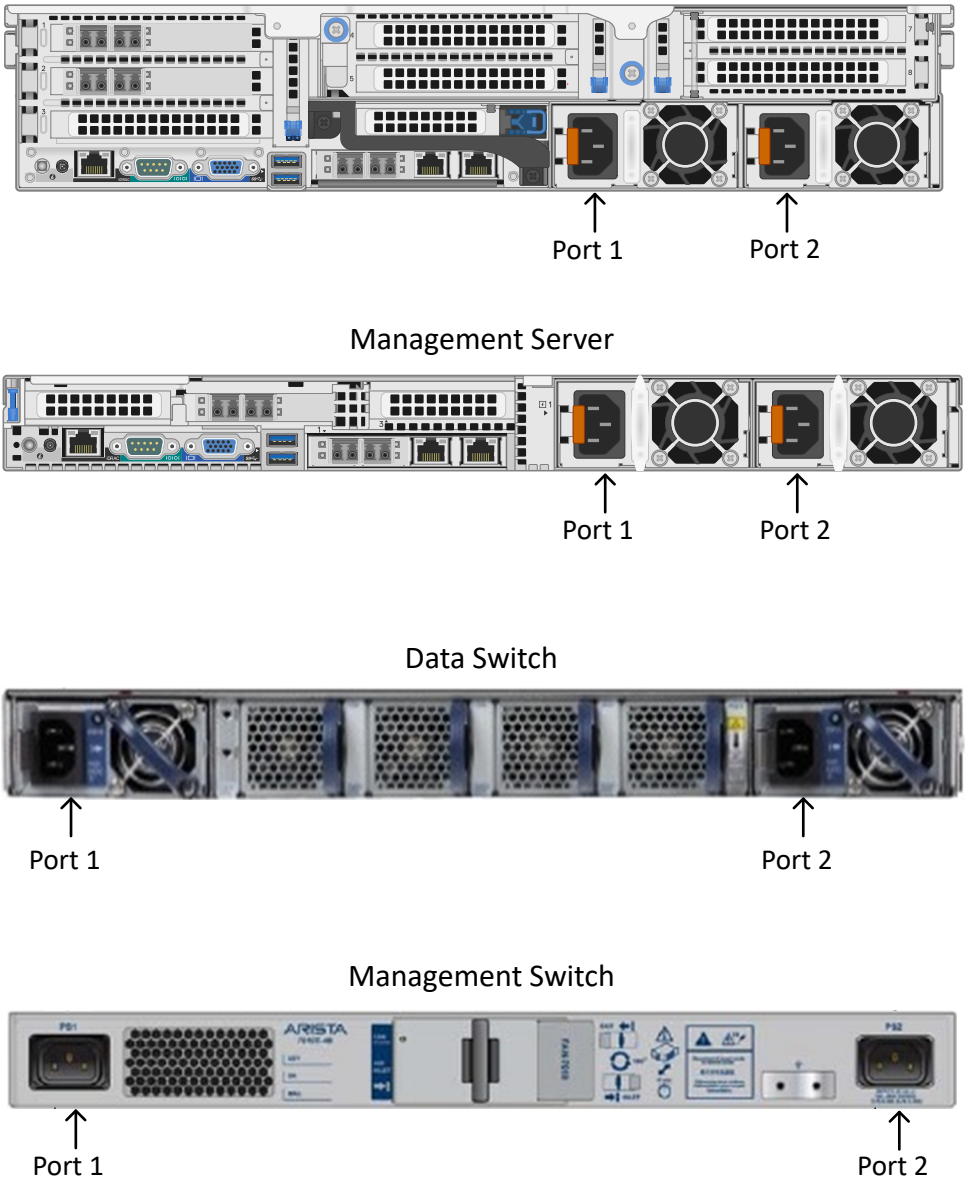

Use the wiring diagrams to connect power, management, and data cables.

As cables are installed and connected, dress and tie cables frequently so that excess slack does not interfere with routing of adjacent cables.

Install and connect cables in the following order:

- Power (typical sample only): Sample single-phase wiring for R740XD servers on page 69
- Management Management network wiring for R740XD servers on page 72
- Data A Data network A wiring for R740XD servers on page 74
- Data B Data network B wiring for R740XD servers on page 76

Sample single-phase wiring for R740XD servers

This topic provides a sample diagram and a connection table for installing and connecting power cables to power distribution units (PDUs) and the equipment. This information is provided as an example only, and may differ from your system setup, depending on the number of nodes and the type of PDUs used in your system. In this example, PDUs with 14 power inlets are used.

Use the following figure and table to connect power cables in cabinets with single-phase power distribution.

Figure 36 Single-phase power distribution

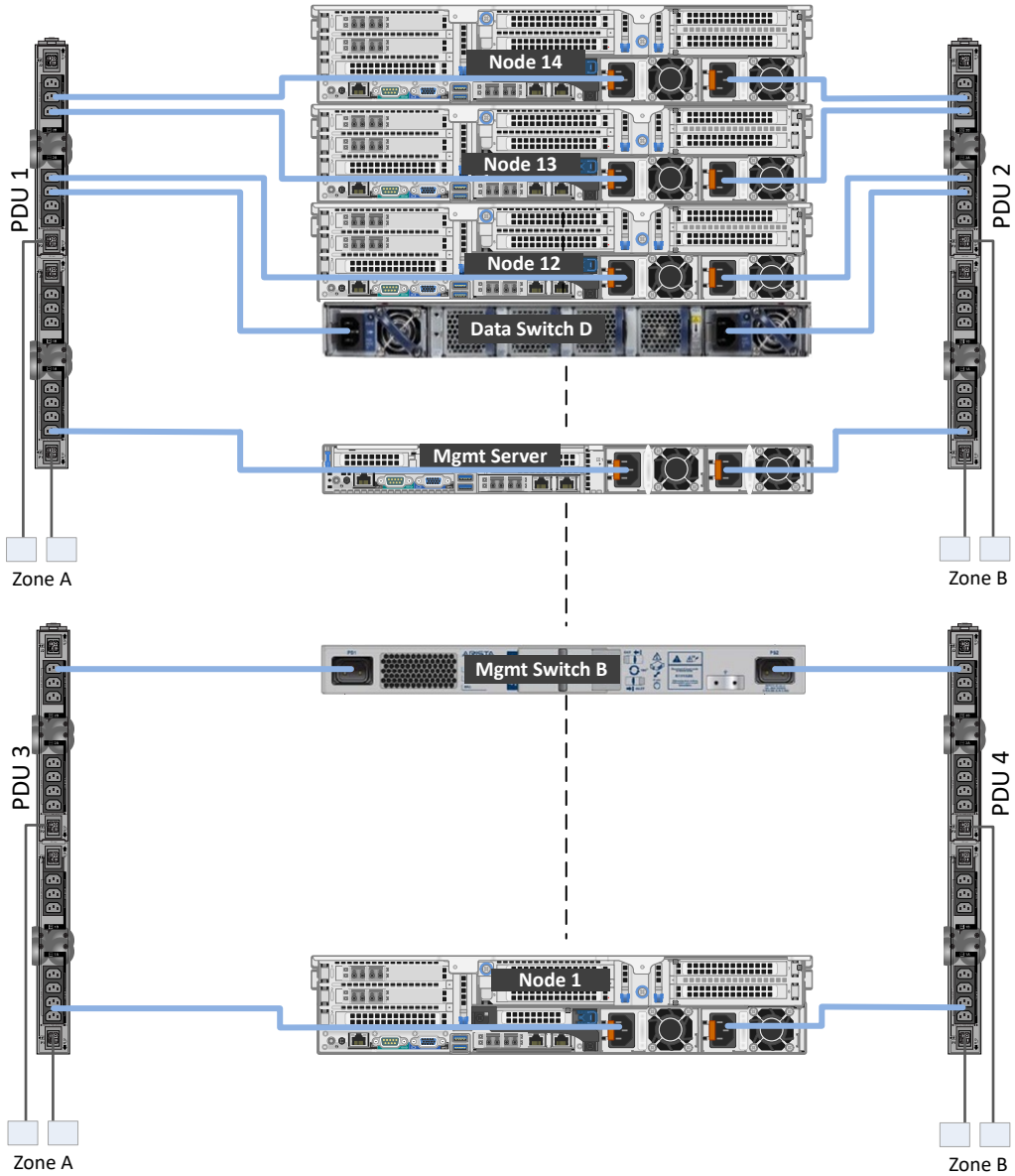

Table 16 Single-phase power distribution cabling

Source	Destination
Node 14 PSU1	PDU 1 Port 2
Node 14 PSU2	PDU 2 Port 2
Node 13 PSU1	PDU 1 Port 3
Node 13 PSU2	PDU 2 Port 3
Node 12 PSU1	PDU 1 Port 4
Node 12 PSU2	PDU 2 Port 4

Table 16 Single-phase power distribution cabling (continued)

Source	Destination
Data Switch D	PDU 1 Port 5
Data Switch D	PDU 2 Port 5
Data Switch C	PDU 1 Port 7
Data Switch C	PDU 2 Port 7
Node 11 PSU1	PDU 1 Port 9
Node 11 PSU2	PDU 2 Port 9
Node 10 PSU1	PDU 1 Port 10
Node 10 PSU2	PDU 2 Port 10
Node 9 PSU1	PDU 1 Port 12
Node 9 PSU2	PDU 2 Port 12
Data Switch B	PDU 1 Port 13
Data Switch B	PDU 2 Port 13
Management Server	PDU 1 Port 14
Management Server	PDU 2 Port 14
Data Switch A	PDU 3 Port 1
Data Switch A	PDU 4 Port 1
Node 8 PSU1	PDU 3 Port 2
Node 8 PSU2	PDU 4 Port 2
Node 7 PSU1	PDU 3 Port 3
Node 7 PSU2	PDU 4 Port 3
Management Switch B	PDU 3 Port 4
Management Switch B	PDU 4 Port 4
Management Switch A	PDU 3 Port 5
Management Switch A	PDU 4 Port 5
Node 6 PSU1	PDU 3 Port 6
Node 6 PSU2	PDU 4 Port 6
Node 5 PSU1	PDU 3 Port 7
Node 5 PSU2	PDU 4 Port 7
Node 4 PSU1	PDU 3 Port 9
Node 4 PSU2	PDU 4 Port 9
Node 3 PSU1	PDU 3 Port 10
Node 3 PSU2	PDU 4 Port 10
Node 2 PSU1	PDU 3 Port 13

Table 16 Single-phase power distribution cabling (continued)

Source	Destination
Node 2 PSU2	PDU 4 Port 13
Node 1 PSU1	PDU 3 Port 14
Node 1 PSU2	PDU 4 Port 14

Management network wiring for R740XD servers

Use the following figure and table to connect the management network cables.

Note: The page does not provide enough space to illustrate cabling of the maximum number of nodes in the management network. However, the table does provide all the source to destination cabling for the maximum sized network.

Figure 37 Management network

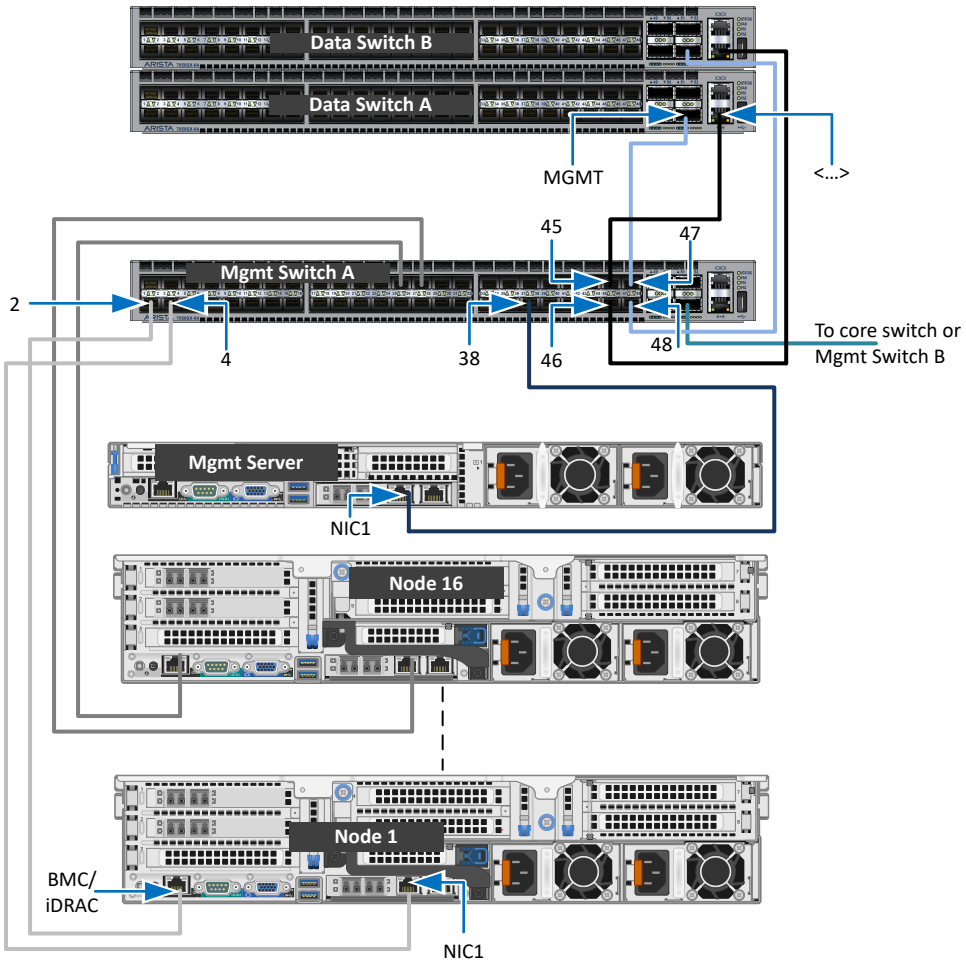

Table 17 Management network cabling

Customer Provided Management Switch	
Source	**Destination**
Node 1 BMC (iDRAC)	Management Switch Port 2
Node 1 NIC 1	Management Switch Port 4
Node 2 BMC (iDRAC)	Management Switch Port 6
Node 2 NIC 1	Management Switch Port 8
Node 3 BMC (iDRAC)	Management Switch Port 10
Node 3 NIC 1	Management Switch Port 12
Node 4 BMC (iDRAC)	Management Switch Port 14
Node 4 NIC 1	Management Switch Port 16
Node 5 BMC (iDRAC)	Management Switch Port 18
Node 5 NIC 1	Management Switch Port 20
Node 6 BMC (iDRAC)	Management Switch Port 22
Node 6 NIC 1	Management Switch Port 24
Node 7 BMC (iDRAC)	Management Switch Port 26
Node 7 NIC 1	Management Switch Port 28
Node 8 BMC (iDRAC)	Management Switch Port 30
Node 8 NIC 1	Management Switch Port 32
Node 9 BMC (iDRAC)	Management Switch Port 34
Node 9 NIC 1	Management Switch Port 36
Node 10 BMC (iDRAC)	Management Switch Port 1
Node 10 NIC 1	Management Switch Port 3
Node 11 BMC (iDRAC)	Management Switch Port 5
Node 11 NIC 1	Management Switch Port 7
Node 12 BMC (iDRAC)	Management Switch Port 9
Node 12 NIC 1	Management Switch Port 11
Node 13 BMC (iDRAC)	Management Switch Port 13
Node 13 NIC 1	Management Switch Port 15
Node 14 BMC (iDRAC)	Management Switch Port 17
Node 14 NIC 1	Management Switch Port 19
Node 15 BMC (iDRAC)	Management Switch Port 21
Node 15 NIC 1	Management Switch Port 23
Node 16 BMC (iDRAC)	Management Switch Port 25
Node 16 NIC 1	Management Switch Port 27

Table 17 Management network cabling (continued)

Customer Provided Management Switch	
Source	**Destination**
Node 17 BMC (iDRAC)	Management Switch Port 29
Node 17 NIC 1	Management Switch Port 31
Data Network Switch A <...> Port	Management Switch Port 45
Data Network Switch B <...> Port	Management Switch Port 46
Data Network Switch A Mgmt Port	Management Switch Port 47
Data Network Switch B Mgmt Port	Management Switch Port 48
Management Server NIC 1	Management Switch Port 38
Link to Core Switch or 2nd Rack Management Switch	Management Switch Port 52

Data network A wiring for R740XD servers

Use the following figure and table to connect the data network A cables.

Note: In this example, data switch ports have been intentionally left empty. These empty ports can be used for other user-allocated purposes. If no other use is required for the empty ports, nodes may be connected to the data switches without leaving empty ports. However, ensure that on each node, each NIC is connected to a different data switch (either Data Switch A or Data Switch B), in order to prevent a single point of failure in case a switch fails.

Figure 38 Data networks A and B

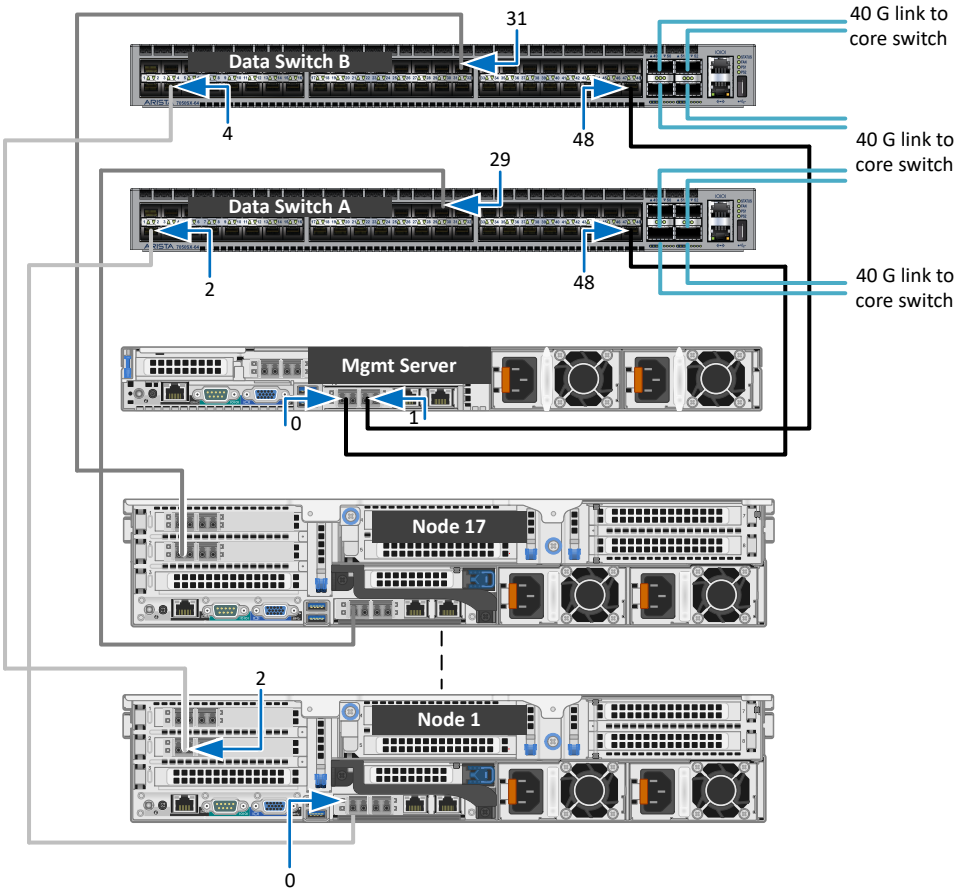

Table 18 Data network A cabling

Data Network A	
Source	Destination
Node 1 Onboard Port 0	Data Network Switch A Port 2
Node 2 Onboard Port 0	Data Network Switch A Port 6
Node 3 Onboard Port 0	Data Network Switch A Port 10
Node 4 Onboard Port 0	Data Network Switch A Port 14
Node 5 Onboard Port 0	Data Network Switch A Port 18
Node 6 Onboard Port 0	Data Network Switch A Port 22
Node 7 Onboard Port 0	Data Network Switch A Port 26
Node 8 Onboard Port 0	Data Network Switch A Port 30
Node 9 Onboard Port 0	Data Network Switch A Port 34
Management Server Port 0	Data Network Switch A Port 48
Node 10 Onboard Port 0	Data Network Switch A Port 1

Table 18 Data network A cabling (continued)

Data Network A	
Node 11 Onboard Port 0	Data Network Switch A Port 5
Node 12 Onboard Port 0	Data Network Switch A Port 9
Node 13 Onboard Port 0	Data Network Switch A Port 13
Node 14 Onboard Port 0	Data Network Switch A Port 17
Node 15 Onboard Port 0	Data Network Switch A Port 21
Node 16 Onboard Port 0	Data Network Switch A Port 25
Node 17 Onboard Port 0	Data Network Switch A Port 29

Data network B wiring for R740XD servers

Use the following table to connect the data network B cables.

Table 19 Data network B cabling

Data Network B	
Source	Destination
Node 1 PCIe Port 2	Data Network Switch B Port 4
Node 2 PCIe Port 2	Data Network Switch B Port 8
Node 3 PCIe Port 2	Data Network Switch B Port 12
Node 4 PCIe Port 2	Data Network Switch B Port 16
Node 5 PCIe Port 2	Data Network Switch B Port 20
Node 6 PCIe Port 2	Data Network Switch B Port 24
Node 7 PCIe Port 2	Data Network Switch B Port 28
Node 8 PCIe Port 2	Data Network Switch B Port 32
Node 9 PCIe Port 2	Data Network Switch B Port 36
Management Server Port 1	Data Network Switch B Port 48
Node 10 PCIe Port 2	Data Network Switch B Port 3
Node 11 PCIe Port 2	Data Network Switch B Port 7
Node 12 PCIe Port 2	Data Network Switch B Port 11
Node 13 PCIe Port 2	Data Network Switch B Port 15
Node 14 PCIe Port 2	Data Network Switch B Port 19
Node 15 PCIe Port 2	Data Network Switch B Port 23
Node 16 PCIe Port 2	Data Network Switch B Port 27
Node 17 PCIe Port 2	Data Network Switch B Port 31

CHAPTER 9

Update the Install Database

This section provides information to update the install database after all installation and configuration work is completed.

- Update the install database 78

Update the install database

After all work is complete, use this procedure to update the install database.

Procedure

1. Open a web browser and navigate to the Dell EMC Business Services website at http://emc.force.com/BusinessServices.
2. In the **Post Sales** area, click **Install Base Group**.
3. Complete and submit the form.

PART 3

R840 Procedures

Installation procedures for VxFlex Ready Node R840 servers

Chapter 10, "R840 Equipment Installation"

Chapter 11, "Cabling Guidelines"

Chapter 12, "Update the Install Database"

CHAPTER 10

R840 Equipment Installation

This section provides information for installation of the equipment used in a VxFlex Ready Node R840 server.

- R840 server installation guidelines 82
- Installation of the equipment in the cabinet 83
- Identify the kit components 84
- Install the rails 84
- Secure the rail assemblies to the cabinet 85
- Install the front bezel 86
- Install the strain relief bar, route and secure cables 87

R840 server installation guidelines

Minimum and maximum stack up configurations are provided in this topic.

Throughout this document, it is assumed that a 40 U rack is being used. If you plan to use a custom rack, or only part of a rack, it is highly recommended that a complete analysis is performed in order to ensure that there is enough power supplied to the nodes. In addition, it is essential that a custom rack has sufficient air flow and heat distribution among nodes. Therefore, for custom rack configurations, perform an air flow analysis and ensure that there is enough spacing between nodes.

Ensure that there is at least one redundant power zone available for power connections.

To ensure proper performance and avoid throttling, the R840 server requires the appropriate inlet temperature. Review this requirement and maintain correct inlet temperature. For more information, see environmental specifications in the *Hardware Replacement and Services Guide*.

When systems are installed into an empty rack, always begin component installation at the bottom of the cabinet and work upward. Install components at the lowest available space for that component type.

If you are installing the minimum configuration, the stack up will be as follows:

Table 20 Stack up for a minimum configuration

Component Function	Description	Quantity	Cabinet U Space
Data Server	R840 Server	3	2 - 7
Management Server	Management Server	1	20
Management Switch	Customer provided 1 GbE switch	1	21
Data Switch	Customer provided 10 GbE switch	2	23 - 24

If you are installing the maximum configuration, the stack up will be as follows:

Table 21 Stack up for a maximum configuration

Component Function	Description	Quantity	Cabinet U Space
Data Server	R840 Server	13 - 15	3 - 19 and 25 - 39
Management Server	Management Server	1	20
Management Switch	Customer provided 1 GbE switch	1	21
Data Switch	Customer provided 10 GbE switch	2	23 - 24

The following illustration represents the maximum R840 configuration.

Figure 39 Cabinet stack up for R840 servers

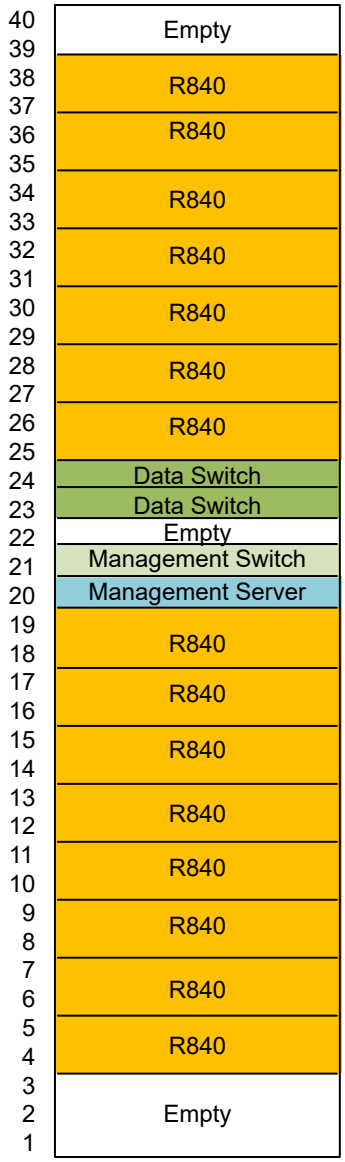

Installation of the equipment in the cabinet

Install equipment in the cabinet or rack. Always begin component installation at the bottom of the cabinet and work upward. Install components at the lowest available space for that component type.

Placement of the equipment in the cabinet is dependent on the type of power distribution units installed in the cabinet. Refer to the equipment stack up guidelines for each type of power distribution.

- Install the servers as described in the following sections. Most of the servers will function as VxFlex Ready Node nodes, and at least one will function as a management server. The procedures for physical installation in the rack or cabinet apply to both types. Once the servers have been installed, refer to the *VxFlex Ready Node Hardware Configuration and Operating System Installation Guide* (for your system's operating system), for server configuration and operating system installation procedures.

- Install the management switches
- Install the data switches

Identify the kit components

Identify the components included in the sliding rail assembly kit.

The sliding rail assemblies allow the server to be secured in the cabinet, and extended from the cabinet so that the system cover can be removed to access the internal FRUs.

Figure 40 Sliding rail assembly

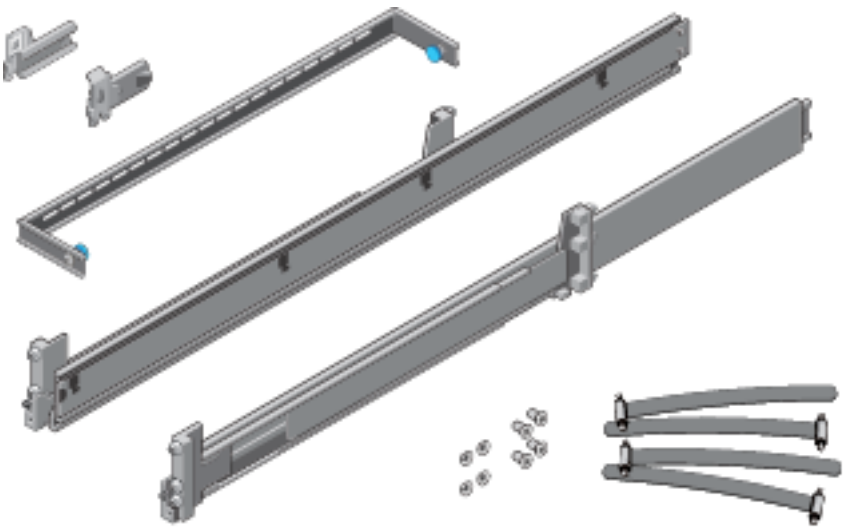

The kit contains the following items shown above from top left to bottom right:

1. Strain relief bar (SRB) bracket (2)
2. SRB (1)
3. B15/B16 sliding rail (2)
4. washer (4)
5. screw (4)
6. hook and loop strap (4)

Install the rails

Install the rails in the cabinet.

About this task

The rails are dedicated left and right, and cannot be interchanged. The front side of each rail is labeled **Left Front** or **Right Front** when the rail faces the cabinet front.

Procedure

1. Determine where to mount the system, and mark the location at the front and back of the cabinet.

   Note: Install the left rail assembly first.

2. Fully extend the rear sliding bracket of the rail.
3. Position the rail end piece labeled **Left Front** facing inward and orient the rear end piece to align with the holes on the rear cabinet flanges.

4. Push the rail straight toward the rear of the rack until the latch locks in place.

Figure 41 Installing the rear end of the rail

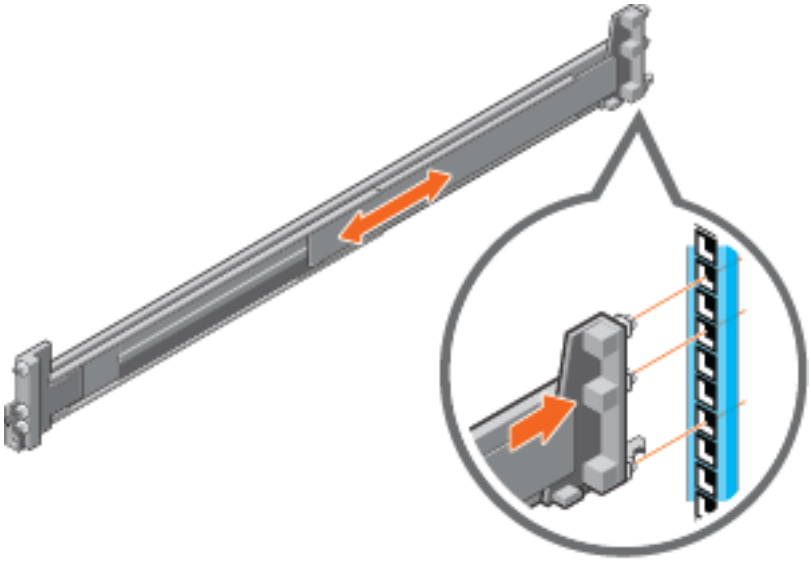

5. For the front end piece, rotate the latch outward and pull the rail forward until the pins slide into the flange, and release the latch to secure the rail in place.

Figure 42 Installing the front end of the rail

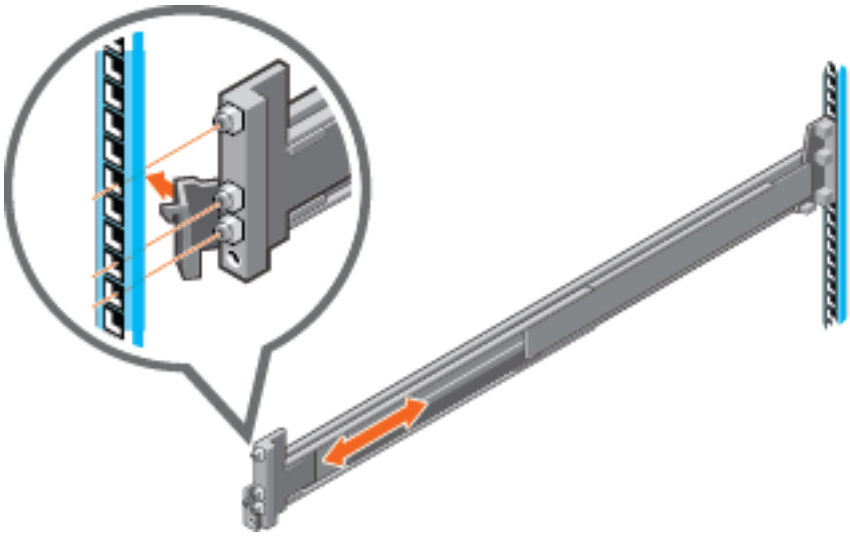

6. Repeat the preceding steps to install the right rail assembly.

Secure the rail assemblies to the cabinet

Use the screws and washers to secure the rails to the cabinet.

About this task

The supplied screws and washers are used to secure the rail assemblies to the front and rear of the cabinet.

Note: For square hole cabinets, install the supplied conical washer before installing the screw. For unthreaded round hole cabinets, install only the screw without the conical washer.

Procedure

1. Align the screws with the designated U spaces on the front and rear rack flanges.

   Note: Ensure that the screw holes on the tab of the system retention bracket are seated on the designated U spaces.

2. Insert and tighten the two screws using the Phillips #2 screwdriver to secure the rails to the cabinet.

   Figure 43 Installing screws

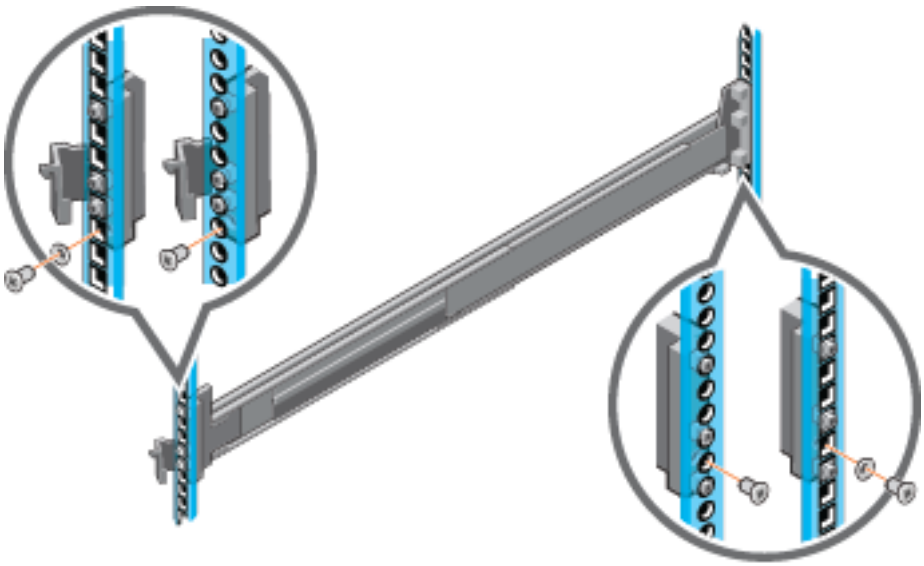

Install the front bezel

Use this procedure to install the front bezel on the server.

Procedure

1. Align and insert the right end of the bezel onto the system.
2. Press the release button and fit the left end of the bezel onto the system.
3. Lock the bezel by using the key.

Figure 44 Installing the front bezel on the system

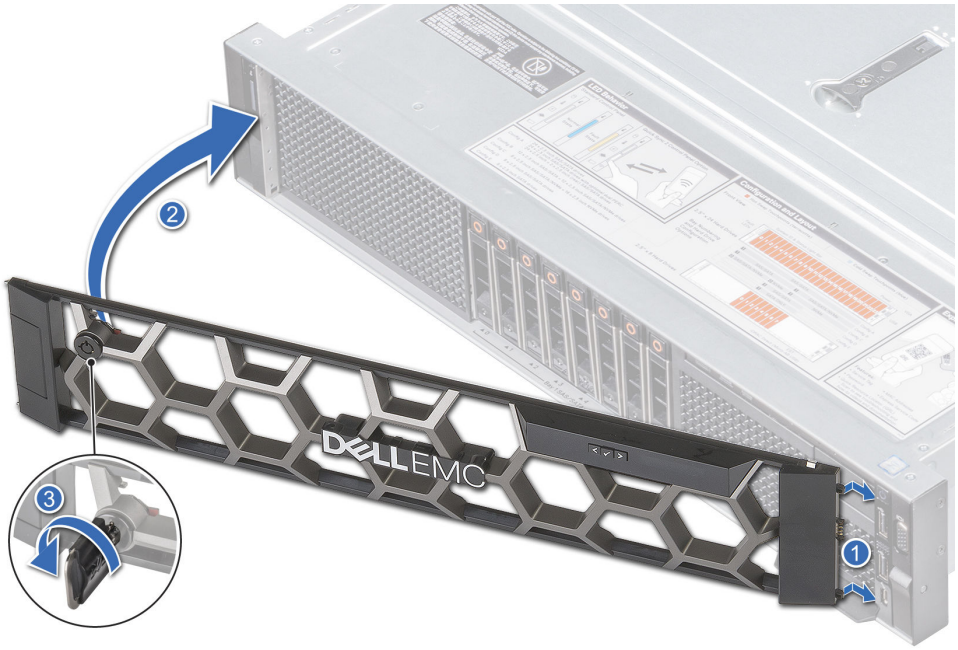

Install the strain relief bar, route and secure cables

Install the strain relief bar (SRB) on the rack, and the hook-and-loop straps that secure cable bundles.

About this task

Install the SRB attachment brackets at the back of the sliding rail with corresponding SIDE A and SIDE B marking. The SRB has two depth positions. Use depth position 1 for deep racks, and depth position 2 for shallow racks.

Procedure

1. Align the holes on the SRB brackets with the pins on the slide rail, and push the brackets downward until they lock into place.
2. Insert the ends of the SRB into the SRB brackets until it locks into place.

Figure 45 Installing the strain relief bar

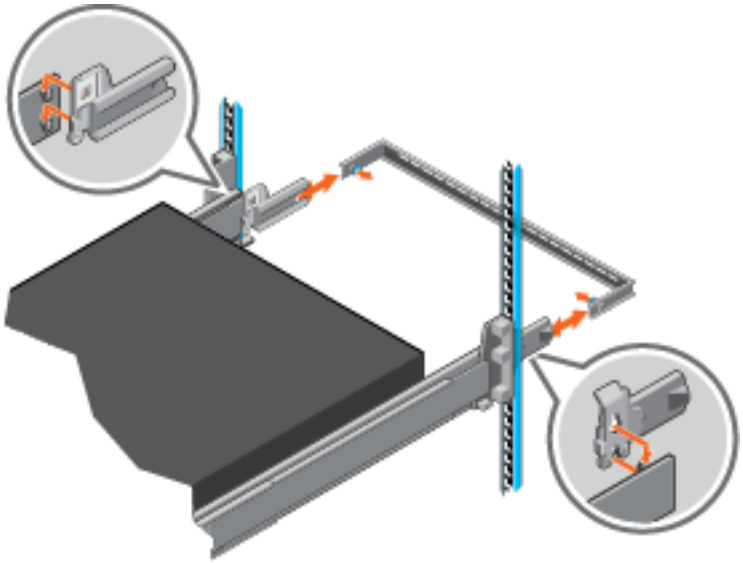

3. Route cables to the server, and thread hook-and-loop straps through the slits on the SRB.

   If the system will be serviced in the rack, create cable service loops close to the SRB.

4. Run the hook-and-loop straps around the cables to secure the cable bundles. Bundle the cables gently, ensuring that you leave enough space for the cables to move when you slide the system out of the rack.

Figure 46 Using hook-and-loop straps to secure cables

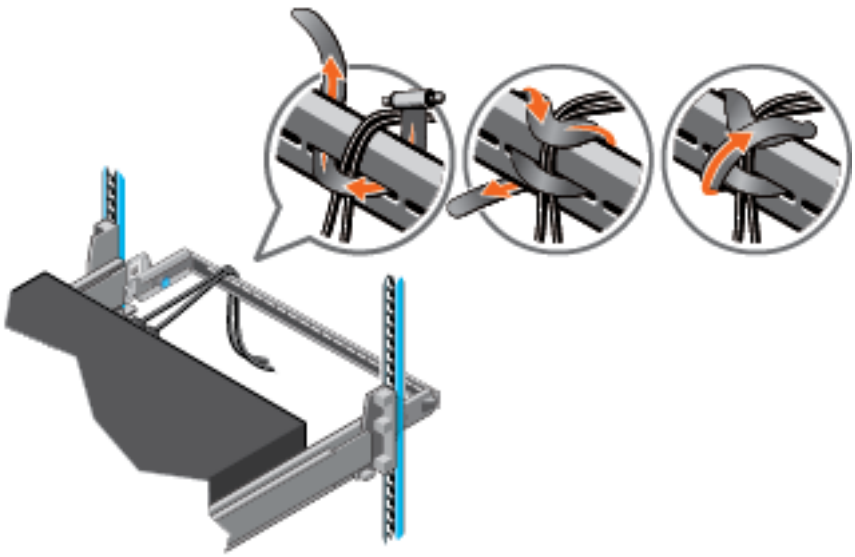

CHAPTER 11

Cabling Guidelines

Follow these general rack and stack guidelines for positioning equipment in the rack, and for routing cables to the equipment.

Rack and Stack is an integration process to stack up switches, servers and storage equipment in a rack or cabinet for deployment. The following issues need to be taken into consideration during this integration process.

- Proper sizing of the Power Distribution Units (PDUs) based on the power requirements of nodes and switches
- Redundant PDUs for power cables
- Redundant network data connection switches
- Provision of optimal airflow in the rack. System performance can be limited if improper air flow causes uneven and localized high temperature zones.
- Data port connection through cable needs to have a pre-planned cable management strategy, for better service experience
- Cable management plans should ensure that it will be easy to remove a node or a component from the rack
- Insertion of a replacement component should not change the existing port and cable configuration
- It should be possible to rapidly add new components to the system
- When adding a new component to the rack, it should be possible to follow the existing cabling and port strategy

Dell EMC recommends that the switches are installed in the middle of the rack, but it is also possible to position switches at the top of the rack. While the middle switch configuration uses shorter cable length on average, and is therefore more cost effective, top-of-rack configuration has better wire management capabilities.

Dell EMC also recommends connecting the cables to the nodes (data port of node to switch) from left to right.

Note: For an example of how to cable the R840 servers, use the examples provided in this guide for R740xd servers.

Figure 47 Example Rack and Stack configuration

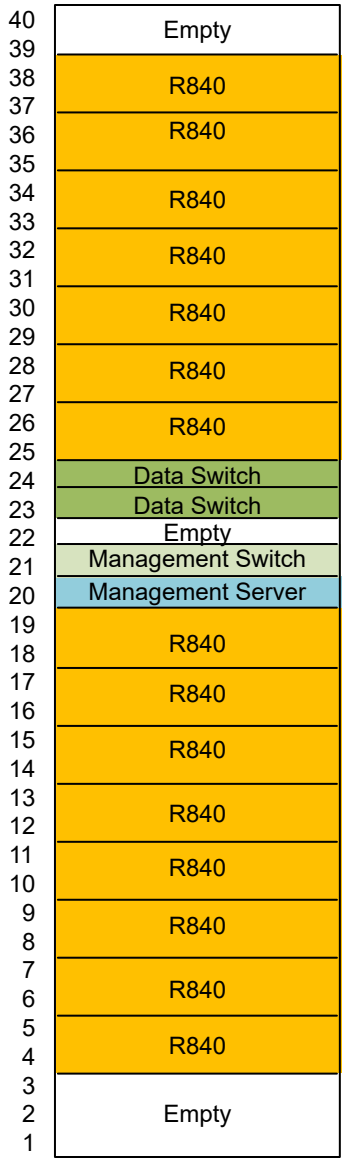

CHAPTER 12

Update the Install Database

This section provides information to update the install database after all installation and configuration work is completed.

- Update the install database 92

Update the install database

After all work is complete, use this procedure to update the install database.

Procedure

1. Open a web browser and navigate to the Dell EMC Business Services website at http://emc.force.com/BusinessServices.
2. In the **Post Sales** area, click **Install Base Group**.
3. Complete and submit the form.