Dell EMC vCloud Director Data Protection Extension

Administration and User Guide

19.1

Dell Inc.

June 2021
Rev. 02

Notes, cautions, and warnings

NOTE: A NOTE indicates important information that helps you make better use of your product.

CAUTION: A CAUTION indicates either potential damage to hardware or loss of data and tells you how to avoid the problem.

WARNING: A WARNING indicates a potential for property damage, personal injury, or death.

© 2001 - 2021 Dell Inc. or its subsidiaries. All rights reserved. Dell, EMC, and other trademarks are trademarks of Dell Inc. or its subsidiaries. Other trademarks may be trademarks of their respective owners.

Contents

Figures 7

Tables 8

Preface 9

Chapter 1: Introduction 12
- vCloud Director Data Protection Extension 12
- Compatibility information 13
- Authentication 13
- Authorization 13
  - Org VDC backup operation customization and configuration 14
- Backup appliances 15
- Organizations and repositories 15
- Backup policy templates 15
- Virtual machine and vApp backup in vCloud Director 15
- Virtual machine and vApp restore in vCloud Director 15
- Initial tasks 16
  - Deploy the vCD DPE 16
  - Add one or more backup appliances 16
  - Register vCloud Director organizations and add backup repositories 16
  - Create backup policies 16
  - vCD DPE UI and REST API functionality 16

Chapter 2: Configuration 19
- Add a backup appliance 19
- Configure organizations and repositories 20
- Customize the vCloud Director tenant portal UI 20
  - Customize the Advanced Protection tab 21

Chapter 3: Backup 22
- Best practices 22
- Captured vApp and VM characteristics 22
- Configure backup policy templates 23
  - Create a backup schedule 24
  - Create a backup retention period 24
  - Create a backup option set 24
  - Create a catalog of backup policy templates 25
- Create a backup policy for an Org VDC 25
- Manage backup policies 26
  - Modify a backup policy 26
  - Set a default backup policy 27
  - Delete a backup policy 27
  - Apply a non-default backup policy template to a vApp 28
- Delete or edit existing backups 28

Configure tenant ad hoc backup capability.... 28
Perform an ad hoc backup.... 29
Get recent activity for selected vApps or all vApps in an Org VDC.... 30
Creating an Avamar checkpoint.... 30

Chapter 4: Restore.... 31
Best practices.... 31
Restore a vApp or a VM to the original Org VDC.... 31
Locate a backup to restore.... 32
Restore a vApp to a new location on the Org VDC.... 32
Restore a vApp or a VM to the original location on the Org VDC.... 33
Restore a deleted vApp.... 34
Restore a vApp to a different Org VDC.... 35
Create a restore-only repository.... 35
Restore the vApp using the restore-only repository.... 36
Perform file-level restores.... 36

Chapter 5: Backup and Restore in the vCloud Director Tenant Portal UI.... 38
Data Protection in the vCloud Director Tenant Portal UI.... 38
Policy.... 40
Policy quotas.... 42
Perform an ad hoc backup in the vCloud Director tenant portal UI.... 42
Restore a vApp or virtual machine to the original Org VDC in the vCloud Director tenant portal UI.... 43
Restore a vApp to its original location.... 44
Restore a virtual machine to its original location.... 44
Restore a vApp to a new location on the Org VDC.... 46
Restore a deleted vApp.... 47

Chapter 6: Replication.... 48
Replicating vApp backups.... 48
Creating a replication policy.... 48
Applying a replication policy to one or more vApps.... 49
Managing replication policies.... 49
Setting a default replication policy.... 50
Modifying a replication policy.... 50
Deleting a replication policy.... 50
Restoring replicated vApp backups.... 51
Configuring a backup appliance.... 51
Creating a restore-only repository.... 51
Restoring replicated backups.... 51
Performing an adhoc replication.... 51

Chapter 7: Reporting.... 53
Introduction.... 53
Reporting system functional overview.... 53
Reporting system database schemas.... 54
T_VAPP_BACKUP_INVENTORY table.... 54
T_VAPP_BACKUP_EVENT table.... 55
T_VAPP_RESTORE_EVENT table.... 56

T_VAPP_REPLICATION_EVENT table....57
T_VAPP_RETENTION_UPDATE_EVENT table....58
T_VAPP_DELETE_BACKUP_EVENT table....58
Reporting capability....59
vApp backup inventory based reports....59
Historical (event) reports....60
Sample reports....60
Chargeback report....60
Frequent User Backup report....61
Partial Backup report....61
Backup Duration report....63

Chapter 8: Operations....65
Shutting down and restarting vCD Data Protection Extension services....65
Changing the lockbox passphrase....66
Changing IP addresses on vCD Data Protection Extension cells....66
Deleting backup repositories for deleted Org VDCs....66
Storage mapping for replicating Data Domain vCD backups....67

Chapter 9: Migration....68
Migration....68
Migrate virtual machines....68
Manage orphaned virtual machines....69
Restore from backups of migrated virtual machines....69

Appendix A: vCD Components Backup and Recovery....70
Backup steps....70
Recovery steps....71

Appendix B: Troubleshooting....72
Database Issues....72
Log file locations....72
vApp backups fail when virtual machines contained in vApp use special characters in the virtual machine name....72
Additional vApp with "Discovered..." in name might appear in vCloud Director after a standalone virtual machine restore....73
The lockbox becomes unreadable on the Cell server and needs to be reset....73
SSL errors....73

Appendix C: Centralized Logging....74
Introduction....74
Unencrypted logging setup....74
Setting up the server....74
Configuring clients....75
Example rsyslog firewall configuration....75
Setting up SSL security....76
Server configuration....76
Client Configuration....76
Example vFabric Postgres server logging configuration....77

Appendix D: Password Rotation **78**
Introduction 78
vCD Data Protection Extension service rotatable passwords 78
VM passwords 78
Connection passwords 79
CST password 79
Avamar credentials change 79
Rotation scenarios 80
Rotating the VM password 80
Rotating a connection password 81
Scheduling password rotation 83
Scheduling password rotation on the VCP server 83
Scheduling password rotation on the Backup Gateway and Reporting servers 84
deployvm.sh 84

Appendix E: Monitoring vCD Data Protection Extension Components **87**
Introduction 87
Setting up monitoring on the backup gateway 87
Turning off monitoring on the backup gateway 88
Setting up monitoring on the vCloud Protector cell 88
Turning off monitoring on the vCloud Protector cell 89
Setting up a remote JMX client for monitoring 89
Backup gateway health monitoring 90
Connectivity to Avamar 90
Connectivity fo the cloud 90
Connectivity to the vCenter 91
vCloud Protector health monitoring 91
Connectivity to the database 91
Connectivity to the cloud 91
Connectivity to RabbitMQ 91
Other JMX clients 92
Troubleshooting 92

Appendix F: Port Usage **93**
Port usage summary 93

Glossary **95**

Figures

1 vCloud Director tenant portal UI main menu..... 39
2 vCloud Director tenant portal UI dashboard..... 39
3 vCloud Director tenant portal UI navigation pane..... 40
4 Policy tab..... 41
5 vApps tab..... 43
6 Restore to Original vApp wizard (Virtual Machine)..... 45
7 Restore New vApp wizard..... 46
8 Interruption of service during credential change..... 81
9 Successfully replacing a database password..... 82
10 Creating a new equivalent user credential..... 83

Tables

1 Revision history ... 9
2 Typographical conventions ... 9
3 vCloud Director compatibility matrix ... 13
4 Elements ... 14
5 Roles and permissions ... 14
6 Available functionality by user interface ... 17
7 Captured vApp characteristics ... 22
8 Captured VM characteristics ... 23
9 Flags and values ... 25
10 Eligibility indicator ... 29
11 Policy details ... 41
12 T_VAPP_BACKUP_INVENTORY table schema ... 54
13 T_VAPP_BACKUP_EVENT table schema ... 55
14 T_VAPP_RESTORE_EVENT table schema ... 56
15 T_VAPP_REPLICATION_EVENT table schema ... 57
16 T_VAPP_RETENTION_UPDATE_EVENT table schema ... 58
17 T_VAPP_DELETE_BACKUP_EVENT table schema ... 59
18 vApp backup inventory reports ... 59
19 Example Chargeback report output ... 60
20 Example Frequent User Backup report output ... 61
21 Example 1: Partial Backup report output ... 61
22 Example 2: Partial Backup report output ... 62
23 Example 3: Partial Backup report output ... 62
24 Example 4: Partial Backup report output ... 62
25 Example 1: Backup Duration report output ... 63
26 Example 2: Backup Duration report output ... 63
27 Example 3: Backup Duration report output ... 63
28 Example 4: Backup Duration report output ... 64
29 Network connection and port usage summary ... 93

Preface

As part of an effort to improve its product lines, revisions of the software and hardware are periodically released. Therefore, some functions described in this document might not be supported by all versions of the software or hardware currently in use. The product release notes provide the most up-to-date information on product features.

Contact a technical support professional when a product does not function correctly or does not function as described in this document.

NOTE: This document was accurate at publication time. To find the latest version of this document, go to Online Support (https://www.dell.com/support).

Purpose

This document describes how to configure and use the vCloud Director Data Protection Extension (vCD DPE).

Audience

This document is intended for system administrators who will be configuring and using the vCD DPE. The document assumes a high degree of knowledge of how to use and administer vCloud Director.

Revision history

The following table presents the revision history of this document.

Table 1. Revision history

Revision	Date	Description
02	June, 2021	Updated the following sections: ● "Port usage summary" in the "Port Usage" appendix ● "Best practices" in the "Backup" and "Restore" chapters
01	May 20, 2019	First release of vCloud Director Data Protection Extension 19.1

Related documentation

The following publications provide additional information:

- *E-LAB Navigator* at https://elabnavigator.emc.com/eln/modernHomeDataProtection
- *vCloud Director Data Protection Extension Release Notes*
- *vCloud Director Data Protection Extension Administration and User Guide*
- *vCloud Director Data Protection Extension REST API Reference Guide*
- *vCloud Director Data Protection Extension Message Bus Specification Reference Guide*
- *Avamar for VMware User Guide*

Typographical conventions

Table 2. Typographical conventions

Bold	Used for names of interface elements, such as names of windows, dialog boxes, buttons, fields, tab names, key names, and menu paths (what the user specifically selects or clicks)

Table 2. Typographical conventions (continued)

Italic	Used for full titles of publications that are referenced in text
`Monospace`	Used for: ● System code ● System output, such as an error message or script ● Pathnames, filenames, prompts, and syntax ● Commands and options
Monospace italic	Used for variables
`Monospace bold`	Used for user input
[ ]	Square brackets enclose optional values
|	Vertical bar indicates alternate selections - the bar means "or"
{ }	Braces enclose content that the user must specify, such as x or y or z
...	Ellipses indicate nonessential information that is omitted from the example

Where to get help

The Avamar support page provides access to licensing information, product documentation, advisories, and downloads, as well as how-to and troubleshooting information. This information may resolve a product issue before contacting Customer Support.

To access the Avamar support page:

1. Go to https://www.dell.com/support.
2. Type a product name in the **Enter a Service Tag, Serial Number, Service Request, Model, or Keyword** search box.
3. Select the product from the list that appears. When you select a product, the **Product Support** page loads automatically.
4. (Optional) Add the product to the **My Products** list by clicking **Add to My Saved Products** in the upper right corner of the **Product Support** page.

Documentation

The Avamar product documentation provides a comprehensive set of feature overview, operational task, and technical reference information. To supplement the information in product administration and user guides, review the following documents:

- Release notes provide an overview of new features and known limitations for a release.
- Technical notes provide technical details about specific product features, including step-by-step tasks, where necessary.
- White papers provide an in-depth technical perspective of a product or products as applied to critical business issues or requirements.

Knowledgebase

The Knowledgebase contains applicable solutions that you can search for either by solution number (for example, KB000xxxxxx) or by keyword.

To search the Knowledgebase:

1. Go to https://www.dell.com/support.
2. Under the **Support** tab, click **Knowledge Base**.
3. Type either the solution number or keywords in the search box. Optionally, you can limit the search to specific products by typing a product name in the search box and then selecting the product from the list that appears.

Online communities

Go to Community Network at https://www.dell.com/community for peer contacts, conversations, and content on product support and solutions. Interactively engage online with customers, partners, and certified professionals for all products.

Live chat

To engage Customer Support by using live interactive chat, click **Join Live Chat** on the **Service Center** panel of the Avamar support page.

Service requests

For in-depth help from Customer Support, submit a service request by clicking **Create Service Requests** on the **Service Center** panel of the Avamar support page.

NOTE: To open a service request, you must have a valid support agreement. Contact a sales representative for details about obtaining a valid support agreement or with questions about an account.

To review an open service request, click the **Service Center** link on the **Service Center** panel, and then click **View and manage service requests**.

Enhancing support

It is recommended to enable ConnectEMC and Email Home on all Avamar systems:

- ConnectEMC automatically generates service requests for high priority events.
- Email Home sends configuration, capacity, and general system information to Customer Support.

Comments and suggestions

Comments and suggestions help to continue to improve the accuracy, organization, and overall quality of the user publications. Send comments and suggestions about this document to DPAD.Doc.Feedback@emc.com.

Include the following information:

- Product name and version
- Document name and revision (for example, 01)
- Page numbers
- Other details to help address documentation issues

1

Introduction

Topics:

- vCloud Director Data Protection Extension
- Compatibility information
- Authentication
- Authorization
- Backup appliances
- Organizations and repositories
- Backup policy templates
- Virtual machine and vApp backup in vCloud Director
- Virtual machine and vApp restore in vCloud Director
- Initial tasks

vCloud Director Data Protection Extension

The vCloud Director Data Protection Extension (vCD DPE) provides backup, restore and replication functionality for operations in the cloud, and consists of two types of administrator roles with different levels of functionality:

- Backup Administrator (Cloud Administrator)—A Backup Administrator can manage backup, restore, and replication operations for the cloud, and also add, configure and manage data protection policies. The backup administrator role is performed by a vCloud Director Administrator who has access rights to the cloud organizations, Organization (Org) virtual datacenters (VDCs), and virtual machines (VMs) and virtual appliances (vApps) that need to be backed up or restored.
- Organization Administrator (Tenant Administrator)—An Organization Administrator can perform VM and vApp backups and restores at the Org level by using the vCloud Director tenant portal UI or the vCD DPE UI, and also manage existing data protection policies. This role supports the creation of Organizations to contain various resources, such as VDCs, and resources allocated to the organization through reservations and other means. Service Providers may use the Organization structure to map to a tenant so they can lease cloud resources to the tenant. In that case, the Organization Administrator is essentially the tenant administrator.

The Backup Administrator (vCD SA) and Organization Administrator (vCD OA) roles will be indicated throughout this document to show which transactions only the vCD SA can perform, only the vCD OA can perform, or both roles can perform.

The vCD DPE allows the vCD SA to configure and manage backup appliances through which you map cloud resources to an Avamar backup store (including Avamar with Data Domain). A backup appliance provides a representation layer to the Avamar server, enabling vCloud backup and recovery operations. Backup capacities on Avamar and connected Data Domain systems are exposed as backup stores.

The vCD SA can then use backup repositories to associate specific Org VDCs to a backup appliance. Backup repositories are logical entities that map a backup store on a backup appliance with an Org VDC. An Org VDC can map to multiple backup repositories; however, only one repository can be made "active" for backups. Non-active repositories are in restore-only mode. This logical construct also enables advanced restore use cases that use filters to look up backups for protected vApps that are deleted or are from another cloud.

After VM or vApp backups have been created and replicated, the administrator (vCD SA or vCD OA) can browse and restore the backups of vApps and individual VMs to their original location or to a new location.

Compatibility information

The vCD DPE solution is compatible with the following software and versions.

Table 3. vCloud Director compatibility matrix

Software	Versions
VMware vCloud Director	9.7, 9.5, 9.1, 9.0 **NOTE:** The vCloud Director tenant portal UI is only compatible with vCloud Director version 9.1.
Avamar	19.1, 18.2, 18.1, 7.5.1
vCenter server	6.7, 6.5, 6.0

NOTE: The vCD DPE is intended to work with the Avamar default security settings (for example, with client/server communication and authentication enabled). If you modify the default Avamar security settings, the vCD DPE does not function as designed and failures occur.

Authentication

A server uses authentication to determine who is accessing the application.

The vCD DPE UI authentication integrates with vCloud Director, where users have to provide their vCloud Director credentials during login to authenticate.

vCloud Director users can authenticate with the following methods through the vCD DPE UI:

- System Administrators:
  - vCloud Director local
  - LDAP
  - vCenter SSO users
- Organization Administrators:
  - vCloud Director local
  - LDAP

  NOTE: vCenter SSO users are not supported for Organization Administrators.

Authorization

Authorization determines which resources are available to specific users.

There are two types of authorization:

- Provided natively by vCloud Director to limit the Organization-specific resources that are returned and made visible by the UI to the logged-in Organization Administrator.
- Provided by the vCD DPE to control who has access to the data protection operations (such as policy management and ad hoc backup or restore from the UI).

In the second case, the UI web app uses and follows the delegated authorization controls as defined by the vCD DPE platform documentation.

Only a vCD SA or a vCD OA can perform backups and restores. vApp owners cannot trigger backups or restores

Org VDC backup operation customization and configuration

The vCD SA assigns and configures backup policies. The vCD OA cannot modify the backup policies that are exposed to an Org VDC, but the vCD OA can apply policies to a vApp or VM.

The purpose of these controls over customization is to support a public provider use case. Aspects of backup policies such as frequency and retention period incur costs to the provider. If the underlying resources that are associated with backup operations are shared across tenants, enforcement of resource consumption constraints enables predictable service for all tenants. A provider administrator can choose to delegate authority over backup policy at a granular level within each Org VDC.

Table 4. Elements

Element	Default	Description
`enableBackupPolicyCustomization`	False	Allow vCD OAs to apply backup policies
`enableAdhocBackup`	False	Allow vCD OAs to trigger an ad hoc backup request for a vApp

The following table depicts the permissions for each role:

Table 5. Roles and permissions

Permissions	vCD SA	vCD OA
Manage Backup Appliances	Yes	No
Manage Organizations	Yes	No
Manage Repositories	Yes	No
Create Restore-only Repository	Yes	No
Manage Policies	Yes	No
Apply Policies	Yes	Yes, if `enableBackupPolicyCustomization` is enabled
Manage Replication	Yes	No
Manage Backups	Yes	Yes. Only the backups that are in the vCD OA's organization
Ad hoc Backups	Yes	Yes, if `enableAdhocBackup` is enabled and the vApps/VMs reside in the vCD OA's organization
Restore vApps or VMs (original or new)	Yes	Yes. Only the backups that are in the vCD OA's organization
Restore deleted vApps	Yes	Yes
Restore vApps to a different Org VDC	Yes	Yes, as long as the Org VDC is in the same Organization
Restore vApps using the restore-only repository	Yes	Yes

NOTE: The vCD OA can manage policies (Create, Read, Update, Delete) through the REST API, but can only apply policies in the UI.

Backup appliances

A backup appliance represents an Avamar server.

The backup appliance maps a physical or virtual Avamar server to your cloud resources through a backup gateway server. It also associates one or more vCenter instances from your cloud to Avamar so that you can perform backup, restore, and replication operations. Before you can configure the vCD DPE to perform backups, the vCD SA must add a backup appliance through the vCD DPE UI.

To scale up your cloud backups, you can deploy additional backup storage (for example, add additional Data Domain systems) within your existing backup appliance. You can also configure additional backup appliances to add new backup storage. You can use a backup appliance to provide a coarse level of tenant isolation.

The vCD SA can manage a backup appliance's internal components, such as backup repository, vCloud Director Organization, backup proxies, and vCenter registration.

Organizations and repositories

After the vCD SA creates a backup appliance, the next step is to register a cloud organization and to map one or more of its virtual data centers to a backup appliance. The vCD SA proceeds by configuring backup repositories, which are required for performing backups and restores.

A backup repository is a configured relationship between a backup appliance and an Org VDC. The vCD SA creates a repository, assigns a name, and selects a backup store on the backup appliance that is associated with that Org VDC. The Avamar server and up to 12 Data Domain systems can be attached to the backup appliance.

vApps within virtual data centers direct their backups through the backup repository to the Avamar server. The backup repository also enables a level of virtual datacenter-based tenant isolation.

Backup policy templates

A backup policy template is a combination of a backup schedule, a retention period, and an option set. Backup policies are created using policy templates and control when vApps back up, how long to keep the backups, and which, if any, options to invoke during the backup process.

To create a backup policy template, the vCD SA must first create at least one schedule, one retention period, and one option set. Then the vCD SA creates a catalog to which backup policy templates are added.

Virtual machine and vApp backup in vCloud Director

Perform vCloud Director backups in the vCloud Director tenant portal UI.

To perform backups in vCloud Director, a vCD SA needs to access vCloud Director resources (organizations, Org VDCs, VMs, and vApps) to assign policies to a vApp. The vCD SA can browse the cloud resources remotely from the configured vCloud Director. If new resources are added to vCloud Director while browsing, the vCD SA can refresh the backup view.

Both the vCD SA (cloud administrators) and vCD OA (tenant administrators) roles can start an ad hoc backup of individual VMs or vApps, and monitor the backup progress in either user interface.

Before you can back up VMs or vApps, the vCD SA must assign policies and repositories to the Org VDCs, as described in Create a backup policy for an Org VDC on page 25.

Virtual machine and vApp restore in vCloud Director

Perform vCloud Director image-level restores in the vCloud Director tenant portal UI. Additionally, you can perform restores at the file level by using the Dell EMC Cloud Data Protection Restore client.

The vCD SA can view organizations and Org VDCs, and browse the backup inventory for the vApps in each VDC. The vCD OA can only see the backup inventory in its own Organization.

The vCD SA can also browse the backup inventory through the backup repository that is associated with the Org VDC. Both administrator roles can then select a VM or vApp backup, and restore it to its original location, a new location in the original Org VDC, or a new location in a different Org VDC (for a vCD SA in the vCD DPE UI only).

Initial tasks

To get started using the vCD DPE, perform the tasks that are described in the following sections.

Deploy the vCD DPE

The *vCloud Director Data Protection Extension Installation and Upgrade Guide* provides more information.

Add one or more backup appliances

Backup appliances enable the vCD SA to associate backup capacity with Org VDCs, and they facilitate the backup and recovery operations on Avamar.

The backup gateway component requires credentials for vCloud resource vCenter servers, similar to the way that Avamar systems require credentials. Provide these credentials through the backup appliance entity.

The vCD SA can add multiple backup appliances as necessary, and use them simultaneously to extend backup capacity based on the size of your cloud. See Add a backup appliance on page 19 for instructions.

NOTE: If needed, after creating a backup appliance, you can add additional vCenters that are managed by vCloud Director. Also, if your vCenter or appliance credentials on those remote systems change, you can update the credentials on the backup appliance.

Register vCloud Director organizations and add backup repositories

The vCD SA must first register the organizations with the vCD DPE. Registering an organization allows the vCD SA to associate any of its VDCs with a backup appliance, and to assign backup and replication policies to it. See Configure organizations and repositories on page 20 for instructions.

Create backup policies

Backup policies allow you to control backup schedules and retention periods. To create a backup policy, the vCD SA must first create policy templates and organize them into catalogs. The vCD SA can then apply the policy to Org VDCs and to vApps. See Configure backup policy templates on page 23 and Create a backup policy for an Org VDC on page 25 for instructions.

vCD DPE UI and REST API functionality

The vCD DPE contains multiple user interfaces that accomplish various objectives:

- The vCloud Director tenant portal UI
- The vCD DPE UI
- The Data Protection Backup and Recovery File-Level Restore (FLR) UI
- The REST API

The following table lists the available functionality for each user interface:

Table 6. Available functionality by user interface

Task		vCloud Director tenant portal UI	vCD DPE UI	FLR UI	REST API
Manage backup policies	Modify a backup policy	No (view only)	Yes	No	Yes
	Set a default backup policy	No (view only)	Yes	No	Yes
	Delete a backup policy	No (view only)	Yes	No	Yes
	Apply a non-default backup policy to a vApp	Yes	Yes	No	Yes
Create a backup policy for an Org VDC		No	Yes	No	Yes
Configure backup policy templates	Create a backup schedule	No	Yes	No	Yes
	Create a backup retention period	No	Yes	No	Yes
	Create a backup option set	No	Yes	No	Yes
	Create a catalog of backup policy templates	No	Yes	No	Yes
Create/configure a backup policy quota	Create/ configure/ modify an ad hoc backup policy quota	No	Yes	No	Yes
	Create/ configure/ modify a scheduled backup policy quota	No	Yes	No	Yes
Perform an ad hoc backup		Yes	Yes	No	Yes
Perform a file-level restore		No	No	Yes	Yes
Restore a vApp or virtual machine to the original Org VDC		Yes	Yes	No	Yes
Restore a vApp to its original location		Yes	Yes	No	Yes
Restore a virtual machine to its original location		Yes	Yes	No	Yes
Restore a vApp to a new location on the Org VDC		Yes	Yes	No	Yes
Restore a deleted vApp		Yes	Yes	No	Yes
Get recent activity for selected vApps or all vApps in an Org VDC		Yes	Yes	No	Yes

Table 6. Available functionality by user interface (continued)

Task	vCloud Director tenant portal UI	vCD DPE UI	FLR UI	REST API
Customize/brand the vCloud Director tenant portal UI[a]	No	No	No	No

a. The system administrator can customize/brand the vCloud Director tenant portal UI at a global level by using the REST API calls provided by VMware.

2

Configuration

Topics:

- Add a backup appliance
- Configure organizations and repositories
- Customize the vCloud Director tenant portal UI

Add a backup appliance

To configure the vCD DPE to perform backups and restores, log in as the vCD SA and add at least one backup appliance.

About this task

To add a backup appliance, you need the name or address, and the credentials of the backup gateway server associated with your Avamar backup store. You can then add vCenters that you manage with vCloud Director to the backup appliance. These vCenters contain the Org VDCs and the vApps that you want to back up.

Steps

1. Log in to the vCD DPE UI plug-in:
   a. Open a web browser and go to the following URL:

      `https://UI_server/vcp-ui-server/vcp-ui/`

      where *UI_server* is the IP address or FQDN of the UI server.

   b. Type the vCD SA credentials and organization ("system").
      The vCD OA cannot perform this task.
2. From the main menu, select **Configure** > **Backup Appliances**.
3. In the **Backup Appliances** pane, click **Add**.
   The **Add Backup Appliance** dialog box opens.
4. Type a name and a description for the backup appliance.
5. Type the URL of the backup gateway server that is associated with the Avamar server.

   For example, **`https://hostname.vcloud.emc.com:8443`**.
6. Type the Avamar Management Console administrator's user name and password.
7. Leave the **Enabled** option checked if you want the backup appliance to be available for performing backups and restores.
8. Click **Next**.
   The vCD DPE tries to verify the connection by logging in to the backup gateway server. When the verification completes, the vCD DPE displays the vCenters that are connected to vCloud Director.
9. To register a vCenter, click **Register Now** next to that vCenter.
   The **vCenter Registration** dialog box opens.
10. In the **vCenter Registration** dialog box, type the vCenter's user name and password, and then click **Register**.
11. Click **Finish**.
    The vCD DPE displays the vCenter in the **vCenters** pane.

Configure organizations and repositories

To configure a cloud organization, register the organization with the vCD DPE. Registering an organization enables you to associate any of its Org VDCs with a backup appliance and to assign backup policies to it.

About this task

After you have registered an organization, you can add a backup repository to it. A repository associates a backup store with the Org VDCs and is required for performing backups and restores. You can add multiple backup repositories to the Org VDCs. However, only one backup repository per Org VDC can be active for backups at a time.

Steps

1. Log in to the vCD DPE UI plug-in:
   a. Open a web browser and go to the following URL:

      `https://`*`UI_server`*`/vcp-ui-server/vcp-ui/`

      where *UI_server* is the IP address or FQDN of the UI server.

   b. Type the vCD SA credentials and organization ("system").

      The vCD OA cannot perform this task.
2. From the main menu, select **Configure** > **Organizations**.
   The **Organizations** pane lists the organizations from vCloud Director.
3. Select an organization from the **Organizations** list.
   The organization's name, ID, and registration status appear in the right pane. If you have not registered the organization with the vCD DPE, the **Register** button is active.
4. Click **Register**.
   When registration completes, a green check mark appears.
5. If required, configure the ad hoc backup quota and retention time from the **Ad Hoc Backup Settings** area and click **Update** to apply changes.
6. In the **Organizations** pane, under the organization that you have registered, select the Org VDC to which you want to add a repository.
7. In the right pane, click **Add** in the **Repositories** tab.
   The **Add Repository for *Org _ VDC_name* Organization VDC** dialog box opens.
8. Type a name and a description for the repository. You can use any name and description that you want.
9. Leave the **Enabled** option selected if you want this repository to be available for backup and recovery.
10. Adjust the **Total Bytes Allowed** and **Bytes Allowed Per Day** settings if needed.

    These settings are for notification purposes only. If the repository reaches a set limit, the vCD DPE creates a "limit reached" notification.
11. Under **Select Backup Store**, select a backup store that is listed under one of the backup appliances, and click **Add**.

    NOTE: Select a backup store that is not already in use by another repository on that Org VDC.

Customize the vCloud Director tenant portal UI

Beginning with vCloud Director 9.0, you can customize tenant portal logos, themes, and styles. Currently, only the system administrator can brand the vCloud Director tenant portal UI at a global level, by using VMware-provided REST API calls.

About this task

To customize the UI, complete the following tasks in the VMware REST API:

- Setting Custom Logos
- Clearing Custom Logos
- Setting Branding Details
- Getting Branding Details

Contact a VMware support professional for more details and instructions on customizing the vCloud Director tenant portal UI.

Customize the Advanced Protection tab

For service providers, the optional **Advanced Protection** tab provides a portal to additional external resources for tenants.

You can customize the items on this portal to include any resources that are appropriate for your environment. Examples include the FLR UI and the Avamar server Desktop/Laptop portal. Data Protection in the vCloud Director Tenant Portal UI on page 38 provides more information about the **Advanced Protection** tab.

The vCD SA uses REST API PUT and GET commands to set and retrieve the available content. Refer to the *vCloud Director Data Protection Extension REST API Reference Guide* for more information about the API calls to update the customized content on the **Advanced Protection** tab. After you use the PUT command to set the available content, it is a best practice to issue a GET command to verify successful completion. The **Advanced Protection** tab updates immediately.

3

Backup

Topics:

- Best practices
- Captured vApp and VM characteristics
- Configure backup policy templates
- Create a backup policy for an Org VDC
- Manage backup policies
- Delete or edit existing backups
- Configure tenant ad hoc backup capability
- Perform an ad hoc backup
- Get recent activity for selected vApps or all vApps in an Org VDC
- Creating an Avamar checkpoint

Best practices

The following best practices apply to performing backups by using the vCD DPE:

- After you complete a successful backup, create an Avamar checkpoint, if you have not done so already. Creating an Avamar checkpoint on page 30 provides instructions.
- The vCD DPE does not support the backup or restore of fast-provisioned VMs. If you back up vApps and VMs that have been fast-provisioned, restore attempts fail.
- Use the vCD DPE UI, the vCloud Director tenant portal UI, or the backup extensions for the vCloud Director REST API to manage backups, backup policies, and backup retention periods. The vCD DPE does not support using the Avamar management console or the AUI to perform these tasks.
- Use the vCloud Director tenant portal UI to perform stand-alone VM backup. The vCD DPE does not support using the vCD DPE UI to perform this task.
- Do not use AUI (Avamar UI) to perfrom any of vAPPs and VMs backup including on-demand backup and scheduled backup. Avamar does not support vCD vAPP/VM backup by using AUI. It can lead to a potential data loss.

Captured vApp and VM characteristics

The following table lists the vApp characteristics that the vCD DPE captures in a backup:

Table 7. Captured vApp characteristics

Item	Recorded in backup	Recoverable	Automatically restored	Restorable through UI
Policy quotas	Yes	No	No	No
Lease settings	Yes	Yes	No[a]	Yes
Startup section	Yes	Yes	No	Yes
Network configuration section	Yes	Yes	No	Yes
Owner	Yes	Yes	No[b]	No
`ControlAccess`	Yes	Yes	No	No
Metadata	Yes	Yes	Yes/No[c]	No
Snapshot description	Yes	No	No	No
Date created	Yes	No	No	No

Table 7. Captured vApp characteristics (continued)

Item	Recorded in backup	Recoverable	Automatically restored	Restorable through UI
vApp name	Yes	Possibly[d]	No[e]	Yes
vApp description	Yes	Yes	No	Yes
`ProductSection`	Yes[f]	Yes	No	No

a. A `LeaseSettingSection` is a parameter on a restore to new operation. This can be the original setting or a completely new lease setting.
b. An Owner is a parameter on a restore to new operation. This can be the original owner or a completely new owner.
c. Yes on restore to new; no on restore to original (rollback).
d. In a vApp restore to new, recovering the original vApp name is possible only if the name is no longer in use.
e. A vApp name is a parameter on a restore to new operation. This can be set to the original vApp name, if the name is not in use.
f. `ProductSection` is not present in all vApps, but is captured where present.

The following table lists the VM characteristics that the vCD DPE captures in a backup:

Table 8. Captured VM characteristics

Item	Recorded in backup	Recoverable	Automatically restored	Restorable through UI
Policy quota	Yes	No	No	No
`NetworkConnectionSection`	Yes	Yes	No	No
`GuestCustomization`	Yes	Yes	No	No
`RuntimeInfoSection`	Yes	No	No	No
`SnapshotSection`	Yes	No	No	No
`DateCreated`	Yes	No	No	No
`StorageProfile`	Yes	Yes	No	No
`ProductSection`	Yes[a]	Yes	No	No
VM name	Yes	Yes	Yes	Yes
VM description and configuration (CPUs and memory)	Yes	Yes	No	Yes
Metadata	Yes	Yes	Yes/No[b]	No

a. `ProductSection` is not present in all VMs, but is captured where present.
b. Yes on restore to new; no on restore to original (rollback).

Configure backup policy templates

A backup policy template is a combination of a backup schedule, a retention period, and an option set. Backup policies are created using policy templates and control when vApps are backed up, how long to keep the backups, and which, if any, options will be invoked during the backup process.

About this task

To create a backup policy template, first create at least one schedule, one retention period, and one option set. Then you can create a catalog to which you add backup policy templates.

The following sections provide instructions for performing all of the steps necessary to create backup policy templates and catalogs.

Steps

Log in to the vCD DPE UI plug-in:

a. Open a web browser and go to the following URL:

   `https://UI_server/vcp-ui-server/vcp-ui/`

   where *UI_server* is the IP address or FQDN of the UI server.

b. Type the vCD SA credentials and organization ("system").
   The vCD OA cannot perform this task.

Create a backup schedule

A backup schedule defines a repeating time period determining when and how often the vCD DPE attempts a backup. Backup schedules are tied to specific time zones. You can create as many backup schedules as you need.

Steps

1. From the main menu, select **Configure** > **Policy Templates**.
2. From the left pane, click **Schedules**.
3. Click **Add**.
   The **New Schedule** dialog box opens.
4. Type a name and a description for the schedule.
5. Under **Repeat This Schedule**, select **Daily**, **Weekly**, **Monthly**, or **On Demand**, and configure the options accordingly.
6. Select the time zone where the vCD DPE runs.
7. Under **Activation Constraints**, select a **Delay Until** date and an **End After** date.
8. Click **Create**.

Create a backup retention period

A backup retention period determines how long the vCD DPE keeps backups before deleting them. A retention period can be a fixed calendar date or an elapsed time period. You can create as many backup retention periods as you need.

Steps

1. From the main menu, select **Configure** > **Policy Templates**.
2. From the left pane, click **Retentions**.
3. Click **Add**.
   The **New Retention** dialog box opens.
4. Type a name and a description for the retention.
5. Select an option under **Retention Policy Settings**, or select **Enable Adaptive Retention**:
   - Retention policy settings apply to all of the backups that use the policy.
   - Adaptive retention settings let you select how long to keep backups based on whether they are daily, weekly, monthly, or yearly backups.
6. Click **Create**.

Create a backup option set

A backup option set is a collection of Avamar plug-in options that the vCD DPE invokes during the backup process. You can create as many backup option sets as you need.

About this task

By default, you should create an option set named `No Options` that has no flags or values.

Steps

1. From the main menu, select **Configure** > **Policy Templates**.
2. From the left pane, click **Options**.
3. Click **Add**.

The **New Options** dialog box opens.

4. Type a name and a description for the option set.

   NOTE: Do not specify any flags unless instructed to do so by Customer Support.

   The following table lists the flags and values that you can specify for either a vApp or a VM (with the help of Customer Support):

   Table 9. Flags and values

Flags	Values
`debug`	• `true` • `false`
`[avtar]encrypt-strength`	• `high` • `none`

5. Click **Create**.

Create a catalog of backup policy templates

A catalog holds a collection of backup policy templates. A backup policy template is a combination of a backup schedule, a backup retention, and a backup option set. The vCD DPE uses these templates when creating backup policies for Org VDCs. When you create a catalog, you can create and add as many backup policy templates to the catalog as needed.

About this task

You can create as many catalogs as needed.

Steps

1. From the main menu, select **Configure** > **Policy Templates**.
2. From the left pane, click **Catalogs**.
3. Click **Add**.
   The **New Catalog** dialog box opens.
4. Type a name and a description for the catalog, and click **Create**.
5. In the **Policy Templates** pane, select the catalog to which you want to add backup policy templates.
6. In the **Catalog Templates** pane, click **Add**.
   The **New Template** dialog box opens.
7. Type a name and a description for the backup policy template.
8. Select a **Schedule**, a **Retention**, and an **Options** template.

   If you want to create a schedule, retention, or options template, you can click **Create** next to the respective list, and then click **Add** to open the dialog box in which to configure the new template.
9. Click **Create** in the **New Template** dialog box.

Create a backup policy for an Org VDC

Create a backup policy, assign it to an Org VDC, and specify it as the default policy to protect all of the vApps that the Org VDC contains.

About this task

Creating a backup policy for an Org VDC requires that you create at least one backup policy template. Configure backup policy templates on page 23 provides instructions.

Steps

1. Log in to the vCD DPE UI plug-in:

a. Open a web browser and go to the following URL:

   `https://UI_server/vcp-ui-server/vcp-ui/`

   where *UI_server* is the IP address or FQDN of the UI server.

b. Type the vCD SA credentials and organization ("system").
   The vCD OA cannot perform this task.

2. From the main menu, select **Configure** > **Organizations**.
3. In the **Organizations** pane, click an organization to expand the list of VDCs.
4. Select the Org VDC to which you want to apply a backup policy.
5. Select the **Policies** tab.
   The **Policies** panel opens in the center pane.
6. Click **Add**.
   The **Add policy** dialog box opens.
7. Select a policy template from the list.
   The dialog box displays the template details, name, and description.
8. Modify the policy name and description, and then click **Add**.
9. To modify the policy's summary, schedule, retention, or option set:
   a. Select the checkbox next to the policy.
      The **Policy -** *policy name* panel opens.
   b. Select the **Summary**, **Schedule**, **Retention**, and **Option Set** tabs as necessary to display the information that you want to modify.
   c. Modify the settings as needed, and then click **Update**.
10. To modify the policy's backup quota settings:
    a. Select the checkbox next to the policy.
       The **Policy -** *policy name* panel opens.
    b. Select the **Summary** tab, and click the wrench icon in the **Backup Quota** section.
       The **Policy Backup Quota** dialog box opens.
    c. Modify the settings as needed, and then click **Update**.
11. Create additional backup policies for the Org VDC as needed.

Manage backup policies

You can manage backup policies by modifying and deleting them, and by setting a default backup policy for an Org VDC.

About this task

Before you use these instructions, perform the previous procedure: Create a backup policy for an Org VDC on page 25.

Steps

Log in to the vCD DPE UI plug-in:

a. Open a web browser and go to the following URL:

   `https://UI_server/vcp-ui-server/vcp-ui/`

   where *UI_server* is the IP address or FQDN of the UI server.

b. Type the vCD SA credentials and organization ("system").
   The vCD OA cannot perform this task.

Modify a backup policy

You can modify a backup policy's name, description, schedule, retention, option set, and backup quota as needed.

Steps

1. From the main menu, select **Configure** > **Organizations**.

2. In the **Organizations** pane, click an organization to expand the list of VDCs.
3. Select the Org VDC to which you want to apply a backup policy.
4. Select the **Policies** tab.
   The **Policies** panel opens in the center pane.
5. Select the check box next to the policy that you want to modify.
   The **Policy -** *policy name* panel opens.
6. Select the **Summary**, **Schedule**, **Retention**, and **Option Set** tabs as necessary to display the information that you want to modify.
7. Modify the settings as needed, and then click **Update**.
8. Select the **Summary** tab, and click the wrench icon in the **Backup Quota** section.
   The **Policy Backup Quota** dialog box opens.
9. Modify the settings as needed, and then click **Update**.

Set a default backup policy

Setting a default backup policy is not required, however Dell EMC recommends that you do so. A default backup policy is applied automatically to all of the vApps within the Org VDC. If more than one policy exists for the VDC, you can set any of the policies as the default, as needed. However, only one backup policy can be the default policy at a time.

About this task

NOTE: When you configure your backups, you can assign an alternate policy to a vApp, if needed, to override the default policy. For instructions, see Apply a non-default backup policy template to a vApp on page 28.

Steps

1. From the main menu, select **Configure** > **Organizations**.
2. In the **Organizations** pane, click an organization to expand the list of VDCs.
3. Select the Org VDC to which you want to set a default policy.
4. Select the **Policies** tab.
   The **Policies** panel opens in the center pane.
5. Click the check box next to the policy that you want to use as the Org VDC's default policy.
6. Click **Default**.

Delete a backup policy

If you have specified a default backup policy, that policy cannot be deleted. When a default policy exists and you delete a non-default backup policy, any vApps that are assigned to the non-default policy are automatically reassigned to the default policy. However, if a default policy does not exist, you cannot delete a non-default policy that has vApps assigned to it.

Steps

1. From the main menu, select **Configure** > **Organizations**.
2. In the **Organizations** pane, click an organization to expand the list of VDCs.
3. Select the Org VDC from which you want to delete a backup policy.
4. Select the **Policies** tab.
   The **Policies** panel is displayed in the center pane.
5. Select the check box next to the policy that you want to delete, and then click **Delete**.
6. Click **Yes** to confirm the deletion.

Apply a non-default backup policy template to a vApp

You can override the default backup policy for a particular vApp by applying a different policy to that vApp.

Steps

1. From the main menu, select **Backup**.
2. In the **Organizations** pane, click an organization to expand the list of VDCs.
3. Select the Org VDC that contains the vApp to which you want to apply the non-default policy.
   The right pane displays summary and configuration information, and a list of vApps contained in that Org VDC.
4. Select the check box next to the vApp to which you want to apply the policy.
5. Click **Apply Policy**, and select a policy from the list, or select **Create Policy** to create a new one.
   A confirmation message indicates that the policy was applied to the vApp.

Delete or edit existing backups

You can delete selected backups, or you can edit the expiration dates.

Steps

1. Log in to the vCD DPE UI plug-in:
   a. Open a web browser and go to the following URL:

      `https://UI_server/vcp-ui-server/vcp-ui/`

      where *UI_server* is the IP address or FQDN of the UI server.

   b. Type the vCD SA or vCD OA credentials and organization.
2. From the main menu, select **Restore**.
3. In the **Organizations** pane, click an organization to expand the list of VDCs.
4. Select the VDC whose backup you want to delete or edit.
5. In the **Repository Summary** pane, select the repository that contains the backup.
6. In the **vApp Inventory** tab, click the name of the vApp.
   The **Backup Inventory** pane contains the backups that exist for that vApp.
7. Click the checkbox next to the backup that you want to delete or edit, and then click **Edit Retention**.
   The **Edit Retention** dialog box opens.
8. In the **Edit Retention** dialog box, either select **Delete Now**, or select a new expiration date, and then click **Update**.

Configure tenant ad hoc backup capability

You can enable or disable ad hoc backup capability per Org VDC.

Steps

1. Log in to the vCD DPE UI plug-in:
   a. Open a web browser and go to the following URL:

      `https://UI_server/vcp-ui-server/vcp-ui/`

      where *UI_server* is the IP address or FQDN of the UI server.

   b. Type the vCD SA credentials and organization ("system").
      The vCD OA cannot perform this task.
2. From the main menu, select **Configure** > **Organizations**.
3. In the **Organizations** pane, click an organization to expand the list of VDCs.
4. Select the Org VDC for which you want to configure the ad hoc backup capability.
5. Select the **Ad Hoc Backup** tab in the right pane of the window.
   - If ad hoc backup is disabled, the plug-in displays the **Enable** button.

- If ad hoc backup is enabled, the plug-in displays the **Disable** button.

6. Click **Enable** to enable ad hoc backup for this Org VDC, or click **Disable** to disable ad hoc backup for this Org VDC.

Perform an ad hoc backup

You can back up one or more vApps at any time by performing an ad hoc backup.

Steps

1. Log in to the vCD DPE UI plug-in:
   a. Open a web browser and go to the following URL:

      `https://UI_server/vcp-ui-server/vcp-ui/`

      where *UI_server* is the IP address or FQDN of the UI server.

   b. Type the vCD SA or vCD OA credentials and organization.
2. From the main menu, select **Backup**.
3. In the **Organizations** pane, click an organization to expand the list of VDCs.
4. Select the Org VDC for which you want to perform the ad hoc backup.

   The right pane displays information about the Org VDC, including the list of vApps that it contains.

   The eligibility of a vApp for backup on an ad hoc basis depends on its status. The **Backup Eligibility** and **Status** columns of the **vApps** pane display the status for each vApp. One of three icons, which represent “eligible for backup,” “questionable for backup,” and “not eligible for backup,” indicate the backup eligibility of each vApp. You can only perform ad hoc backups on vApps that are in eligible or questionable status.

   Table 10. Eligibility indicator

Indicator	Eligibility	Statuses
	Eligible—the client application requests ad hoc backups for these vApps.	• Suspended • Stopped • Powered on • Powered off • Resolved
	Questionable—the client application requests the ad hoc backup, and relies on the server to report success or failure.	• Waiting for user input • Unknown • Unrecognized • Inconsistent state • Mixed
	Not Eligible—the client application blocks you from performing an ad hoc backup for these vApps[a].	• Failed to create • Unresolved

   a. vApps that do not have VMs are also not eligible for backup.

5. Select the check boxes next to the Eligible or Questionable vApps that you want to back up.
6. Click **Backup**.
7. To monitor progress, return to the main menu and select **Tasks** > **In Progress**.

Get recent activity for selected vApps or all vApps in an Org VDC

You can get a list of recent activities (backup/restore) for one or more selected vApps, or for all vApps in an Org VDC at once. The activity list is downloaded from the browser as a `.csv` file, which provides activity details for not only the vApp, but also the virtual machines involved.

Steps

1. Log in to the vCD DPE UI plug-in:
   a. Open a web browser and go to the following URL:

      `https://`*`UI_server`*`/vcp-ui-server/vcp-ui/`

      where *UI_server* is the IP address or FQDN of the UI server.

   b. Type the vCD SA or vCD OA credentials and organization.
2. From the main menu, select **Backup**.
3. In the **Organizations** pane, click an organization to expand the list of VDCs.
4. Select the Org VDC that contains the vApps for which you want to query.
5. If you want a list of activities for one or more individual vApps, select the checkbox next to the name of any vApp or vApps. If you want a list of activities for all vApps in an Org VDC at once, skip this step.
6. If querying for one or more selected vApps, click **Activities for vApps**. If querying for all vApps in the Org VDC, click **Activities for vDC**.

Results

The vCD DPE provides a file for download that contains the query results.

Creating an Avamar checkpoint

After you configure the vCD DPE and run a successful backup, create and validate an Avamar checkpoint, in case you ever need to roll back the system to a known working state.

The Advanced Server Administration and Maintenance chapter of the *Avamar Administration Guide* provides more information about checkpoints, including how to create, validate, and roll back checkpoints.

4

Restore

Topics:

- Best practices
- Restore a vApp or a VM to the original Org VDC
- Restore a vApp to a different Org VDC
- Perform file-level restores

Best practices

The following best practices apply to performing restores:

- Use the vCD DPE UI, the vCloud Director tenant portal UI, or the backup extensions for the vCloud Director REST API to restore VMs or vApps. The vCD DPE does not support using the Avamar management console or the AUI to perform these tasks.
- The vCD DPE does not support the backup or restore of fast-provisioned VMs.
  - Do not attempt to restore a vApp that was fast provisioned when it was backed up.
  - Do not restore any vApp backup to a fast-provisioned environment.
- Use the vCloud Director tenant portal UI to perform stand-alone VM restore. The vCD DPE UI does not support stand-alone VM restore.
- Do not use AUI (Avamar UI) to restore vAPPs and VMs because it can lead to a potential data loss.

Restore a vApp or a VM to the original Org VDC

You can browse a list of vApp backups that exist in vCloud Director for a specific organization, and select the backup that you want to restore from a backup repository. You can then restore a vApp or a VM to its original location on the Org VDC, or you can restore a vApp to a new location on the original Org VDC.

About this task

NOTE: The vCD DPE does not support fast provisioning. If you try to restore a vApp that was fast-provisioned when you backed it up, the restore fails.

Before you can restore a backup, the Org VDC must have an associated backup repository. Configure organizations and repositories on page 20 provides instructions.

The following sections provide instructions for performing all of the steps necessary to restore a vApp or a VM to the original Org VDC.

Before using these instructions, log in to the vCD DPE UI.

Steps

Log in to the vCD DPE UI plug-in:

a. Open a web browser and go to the following URL:

   `https://UI_server/vcp-ui-server/vcp-ui/`

   where *UI_server* is the IP address or FQDN of the UI server.

b. Type the vCD SA or vCD OA credentials and organization.

Locate a backup to restore

Steps

1. From the main menu, select **Restore**.
2. In the **Organizations** pane, click an organization to expand the list of VDCs.
3. Select a VDC from the list.
   The vCD DPE displays information about the selected VDC.
4. In the **Repository Summary** pane, select the repository that contains the backup that you want to restore.
5. In the **vApp Inventory** tab, click the name of the vApp that you want to restore.
   The **Backup Inventory** pane displays the backups that exist for that vApp.
6. In the **Backup Inventory** pane, click the checkbox next to the backup that you want to restore.

   To see details about the backup, click a backup's date/time identifier.
7. Click **Restore**, and select one of the options: **Restore New** or **Restore Original**.

   Depending on your selection, follow the instructions in Restore a vApp to a new location on the Org VDC on page 32 or in Restore a vApp or a VM to the original location on the Org VDC on page 33.

Restore a vApp to a new location on the Org VDC

The **Restore New** option restores a new copy of a vApp on the Org VDC. When you select **Restore New**, the **New vApp Details** dialog box opens.

Prerequisites

NOTE: This procedure works only for vApps, not for individual VMs.

Steps

1. In the **New vApp Details** dialog box, type a name and a description for the new vApp, and then click **Next**.
2. In the **Virtual Machines** pane, review the VMs in the vApp, and then click **Next**.
   The **Virtual Machines in vApp** pane lists the VMs in the vApp.
3. Click **Next**.
   The **Leases** pane opens.
4. To restore the runtime and storage leases when the vApp is restored, select **Restore leases**.
5. Click **Next**.
   The **Start Order** pane opens, with the **Restore start order** option selected by default.
6. If you do not want to restore the order in which the VMs were configured to start at the time of the backup, clear the **Restore start order** checkbox.
7. Click **Next**.
   The **Networks** pane opens and displays any network configurations that existed at the time of the backup.
8. If no networks were found in the backup, click **Finish**.
   A confirmation message indicates the start of the restore operation.
9. If networks were found, and you want to restore the network configurations:
   a. Select **Restore networks**, and then click **Next**.
      The **Network Connections** pane opens.
   b. If you want the network to connect when the vApp is restored, select **Connected**.
   c. Click **Finish**.
      A confirmation message indicates the start of the restore operation.
10. To monitor progress, return to the main menu and select **Tasks** > **In Progress**.

    You can also monitor progress from the vCenter by selecting **Inventory** > **VMs and Templates** > **EMCAvamarRestoresInProgress**.

Restore a vApp or a VM to the original location on the Org VDC

The **Restore Original** option overwrites the original vApp or VM on the Org VDC. When you select **Restore Original**, the **Choose Restore Type** dialog box opens, and you can select **vApp** or **Virtual Machine**.

Depending on your selection, follow the instructions in Restore a vApp to its original location on page 33 or in Restore a VM to its original location on page 33.

Restore a vApp to its original location

When you restore a vApp to its original location, the vCD DPE restores VMs that were deleted from the vApp after the last backup. You can also select whether to restore VMs that were added since the last backup.

Prerequisites

NOTE: Stop a vApp before you restore it.

Steps

1. In the **Choose Restore Type** dialog box, select **vApp**, and then click **Next**.

   The **Restore Original vApp** dialog box opens to the **Virtual Machines** pane.

   For the VMs that are associated with a vApp, if any disk configurations have changed since the previous backup, the vCD DPE displays a warning:

   ```
   Virtual machine(s) within this vApp will be recreated due to disk configuration changes.
   This will cause a change to the virtual machine's id.
   ```

   The vCD DPE re-creates these VMs with a new ID during the restore operation.
2. To restore only those VMs that existed at the time of the backup, select **Delete VMs that were not part of this backup** from the **Virtual Machines** pane.
3. Click **Next**.
   The **Start Order** pane opens, with the **Restore start order** option selected by default.
4. To restore the order in which the VMs were configured to start at the time of the backup, select **Restore start order**.
5. Click **Next**.
   The **Networks** pane opens and displays any network configurations that existed at the time of the backup.
6. If no networks were found in the backup, click **Finish**.
   A confirmation message indicates the start of the restore operation.
7. If networks were found, and you want to restore the network configurations:
   a. Select **Restore networks**, and then click **Next**.
      The **Network Connections** pane opens.
   b. If you want the network to connect when the vApp is restored, select **Connected**.
   c. Click **Finish**.
      A confirmation message indicates the start of the restore operation.
8. To monitor progress, return to the main menu and select **Tasks** > **In Progress**.

   You can also monitor progress from the vCenter by selecting **Inventory** > **VMs and Templates** > **EMCAvamarRestoresInProgress**.

Restore a VM to its original location

When you choose to restore a VM, you can select from a list of VMs that are contained in the vApp. You can restore only one VM at a time.

Prerequisites

NOTE: Power down the VM before you restore it.

Steps

1. In the **Choose Restore Type** dialog box, select **Virtual Machine**, and then click **Next**.

   The **Restore Individual VM** dialog box opens and lists the VMs in the backup.

2. Select the VM that you want to restore, and then click **Next**.

   The **Review Disks** pane opens and lists the VM disks, under **Disks in backup**.

   If the configuration was changed for one or more of the VM disks, a red warning icon indicates the changed disk and the vCD DPE displays the message:

   ```
   Unable to restore this virtual machine. The configuration of the disk(s) has changed since the backup.
   ```

   In this case, select one of the following options:

   - Restore the vApp to which this VM belongs. This option re-creates all of the VMs in the vApp with changed disk configurations, and restores all other VMs in the vApp.
   - Cancel the restore.

3. If you do not want to restore the VM configuration, clear the **Restore virtual machine configuration (CPUs, memory)** option.
4. Click **Finish**.
   A confirmation message indicates the start of the restore operation.
5. To monitor progress, return to the main menu and select **Tasks** > **In Progress**.

   You can also monitor progress from the vCenter by selecting **Inventory** > **VMs and Templates** > **EMCAvamarRestoresInProgress**.

Restore a deleted vApp

You can restore vApps that were deleted from vCloud Director since the previous backup. The vCD DPE restores a deleted vApp to the Org VDC from which it was deleted.

Steps

1. From the main menu, select **Restore**.
2. In the **Organizations** pane, click an organization to expand the list of VDCs.
3. Select a VDC from the list.
4. In the **Repository Summary** pane, select the repository that contains the backup that you want to restore.
5. Select the **Deleted vApp Inventory** tab.
6. Click the name of the vApp that you want to restore.
   The **Backup Inventory** pane displays the backups that exist for that vApp.
7. In the **Backup Inventory** pane, click the checkbox next to the backup that you want to restore.
8. Click **Restore**.
   The **Restore New vApp** dialog box opens.
9. In the **New vApp Details** pane, type a name and a description for the vApp, and then click **Next**.
   The **Virtual Machines in vApp** pane displays the VMs in the vApp.
10. Click **Next**.
    The **Leases** pane opens.
11. To restore the runtime and storage leases when the vApp is restored, select **Restore leases**.
12. Click **Next**.
    The **Start Order** pane opens, with the **Restore start order** option selected by default.
13. If you do not want to restore the order in which the VMs were configured to start at the time of the backup, clear the **Restore start order** checkbox.
14. Click **Next**.
    The **Networks** pane opens and displays any network configurations that existed at the time of the backup.
15. If no networks were found in the backup, click **Finish**.
    A confirmation message indicates the start of the restore operation.
16. If networks were found, and you want to restore the network configurations:
    a. Select **Restore networks**, and then click **Next**.

The **Network Connections** pane opens.

b. If you want the network to connect when the vApp is restored, select **Connected**.

c. Click **Finish**.
A confirmation message indicates the start of the restore operation.

17. To monitor progress, return to the main menu and select **Tasks** > **In Progress**.
You can also monitor progress from the vCenter by selecting **Inventory** > **VMs and Templates** > **EMCAvamarRestoresInProgress**.

Restore a vApp to a different Org VDC

You can use a restore-only repository to restore a vApp to an Org VDC that is different from the one on which the vApp was originally installed.

About this task

NOTE: The vCD DPE does not support the backup or restore of fast-provisioned VMs. If you try to restore vApps and VMs that were fast-provisioned, restore attempts fail.

The following sections provide instructions for performing all of the necessary steps to restore a vApp to a different Org VDC. Before you use these instructions, log in to the vCD DPE UI:

Steps

Log in to the vCD DPE UI plug-in:

a. Open a web browser and go to the following URL:

`https://`*`UI_server`*`/vcp-ui-server/vcp-ui/`

where *UI_server* is the IP address or FQDN of the UI server.

b. Type the vCD SA credentials and organization ("system").
The vCD OA cannot perform this task.

Create a restore-only repository

To restore a vApp to a different Org VDC, create a restore-only repository. Restore-only repositories are used only for restores, never for backups.

About this task

When you create a restore-only repository, select a source and a destination Org VDC. The source Org VDC contains (or originally contained) the vApp that you want to restore. The destination Org VDC is the VDC to which you want to restore the vApp.

Use a restore-only repository when you want to restore:

- A vApp to a different Org VDC
- A vApp that was installed on an Org VDC that has been deleted from vCloud Director
- A vApp backup that was replicated by Avamar

Steps

1. From the main menu, select **Configure** > **Backup Appliances**.
2. Select the backup appliance that contains the backup that you want to restore.
3. Select the **Restore Only Repository Sources** tab.
The vCD DPE displays the clouds on that backup appliance.
4. Click the arrow beside the cloud to expand the list of organizations.
5. Click the arrow beside an organization to expand the list of VDCs.
6. Select the Org VDC that contains the vApp that you want to restore, and then click **Create Restore Only Repository**.
The **Create Restore Only Repository** dialog box opens.
7. Type a name and a description for the repository.

8. If you want the repository to be available for restores, leave the **Enabled** option checked.
9. Under **Select Destination Org VDC**, click the arrow beside an organization's name to expand the list of VDCs.
10. Select the Org VDC to which you want to restore the vApp, and then click **Create**.
    The vCD DPE creates a restore-only repository for this Org VDC.

Restore the vApp using the restore-only repository

Steps

1. From the main menu, select **Restore**.
2. In the **Organizations** pane, click an organization to expand the list of VDCs.
3. Select the destination Org VDC.
   The vCD DPE displays Information about the Org VDC.
4. In the **Repository Summary** pane, select the restore-only repository from the list of repositories.
   The **vApp Inventory** pane displays the vApps for the source Org VDC.
5. Click the name of the vApp that you want to restore.
   The **Backup Inventory** pane displays the backups that exist for that vApp.
6. In the **Backup Inventory** pane, click the checkbox next to the backup that you want to restore.
7. Click **Restore**.
   The **Restore New vApp** dialog box opens.
8. In the **New vApp Details** pane, type a name and a description for the vApp, and then click **Next**.
   The **Virtual Machines in vApp** pane displays the VMs in the vApp.
9. Click **Next**.
   The **Leases** pane opens.
10. To restore the runtime and storage leases when the vApp is restored, select **Restore leases**.
11. Click **Next**.
    The **Start Order** pane opens, with the **Restore start order** option selected by default.
12. If you do not want to restore the order in which the VMs were configured to start at the time of the backup, clear the **Restore start order** checkbox.
13. Click **Next**.
    The **Networks** pane opens and displays any network configurations that existed at the time of the backup.
14. If no networks were found in the backup, click **Finish**.
    A confirmation message indicates the start of the restore operation.
15. If networks were found, and you want to restore the network configurations:
    a. Select **Restore networks**, and then click **Next**.
       The **Network Connections** pane opens.
    b. If you want the network to connect when the vApp is restored, select **Connected**.
    c. Click **Finish**.
       A confirmation message indicates the start of the restore operation.
16. To monitor progress, return to the main menu and select **Tasks** > **In Progress**.
    You can also monitor progress from the vCenter by selecting **Inventory** > **VMs and Templates** > **EMCAvamarRestoresInProgress**.

Perform file-level restores

The Dell EMC Cloud Data Protection Restore Client is a file-level restore (FLR) user interface that you access through a web server. The client enables you to restore specific files and folders from a source VM that is contained within a vApp backup to a folder in a destination VM that is contained in a vApp within vCloud Director. You can restore files and folders either to the original machine or to a different machine.

Prerequisites

To perform file-level restores:

- You must have vCloud Director credentials to log in to the FLR UI server to browse the source VM for the files or folders you want to restore.

- You must be able to log in to the destination VM to browse to the location where the files or folders are restored.
- The source VM must exist in vCloud Director.
- The destination VM must be powered on and registered with the vCD DPE, and have the VMware tools installed.

About this task

NOTE: The file-level restore feature supports restoring files or folders from a Windows backup to a Windows machine and from a Linux backup to a Linux machine.

Steps

1. Open a web browser and go to the following URL:
   `https://FLR_UI_server:5481/vcp-flr-ui/`
   The Dell EMC Cloud Data Protection Restore Client login dialog box opens.
2. Type your vCloud Director credentials, and then click **Login**.
   The **Select the Organization to restore from** window opens.
3. Select the Org from which you want to restore, and then click **Next**.
   The **Select the Virtual Datacenter to restore from** window opens.
4. Select the VDC from which you want to restore, and then click **Next**.
   The **Select the vApp to restore from** window opens.
5. Select the vApp from which you want to restore, and then click **Next**.
   The **Select the Backup to restore from** window opens.
6. Select the backup from which you want to restore, and then click **Next**.
   The **Select the VM to restore from** window opens.
7. Select the VM from which you want to restore, and then click **Next**.
   The **Select items to restore** window opens.
8. Browse to the files or folders that you want to restore, double-click them (or drag them to the **Selected Items** pane), and then click **Next**.
   The **Select destination to restore to** window opens to the **Select Organization** tab.
9. Select the name of the organization to which you want to restore, and then click **Next**.
   The **Select Data Center** window opens.
10. Select the name of the data center to which you want to restore, and then click **Next**.
    The **Select vApp** window opens.
11. Select the name of the vApp to which you want to restore, and then click **Next**.
    The **Select VM** window opens.
12. Select the name of the destination VM, and then click **Next**.
    The **Enter credentials of** *VM_name* dialog box opens.
13. Type the credentials for the destination VM, and then click **Login**.
    After you have successfully logged in, the **Select Folder** window opens.
14. Browse to the location to which you want to restore, double-click the location, and then click **Finish**.
    The **Restore Confirmation** dialog box opens.
15. Click **Yes**.
    The restore operation begins.
16. To monitor progress, return to the main menu and select **Tasks** > **In Progress**.

    You can also monitor progress from the vCenter by selecting **Inventory** > **VMs and Templates** > **EMCAvamarRestoresInProgress**.
17. To monitor progress, click the arrow button in the lower-right corner of the Dell EMC Cloud Data Protection Restore Client window.

    The **Restore Monitor** opens. Click **Refresh** as the restore progresses.

    You can also monitor progress in the Avamar Administrator Activity Monitor or the AUI.

5

Backup and Restore in the vCloud Director Tenant Portal UI

The following topics describe the backup and restore functionality in the vCloud Director tenant portal UI:

Topics:

- Data Protection in the vCloud Director Tenant Portal UI
- Policy
- Perform an ad hoc backup in the vCloud Director tenant portal UI
- Restore a vApp or virtual machine to the original Org VDC in the vCloud Director tenant portal UI

Data Protection in the vCloud Director Tenant Portal UI

The vCloud Director tenant portal UI provides a subset of the Avamar VMware cloud backup and restore functionality that is available in the vCD DPE UI for tasks that are performed by the Organization Administrator (vCD OA) role, also known as the tenant administrator. You can view protection policies by tenant, modify policies and monitor policy quotas, and perform virtual machine and vApp backups and recoveries.

To access the vCloud Director tenant portal UI, open a web browser and go to `https://vCD_UI_server/tenant/tenant_name`, where *vCD_UI_server* is the IP address or FQDN of the vCloud Director server. In the login page, type the vCD OA credentials and organization.

The vCloud Director tenant portal UI opens on the **Virtual Datacenters** page, which displays the existing tenants. From the main menu drop-down, select **Data Protection**, as shown in the following illustration.

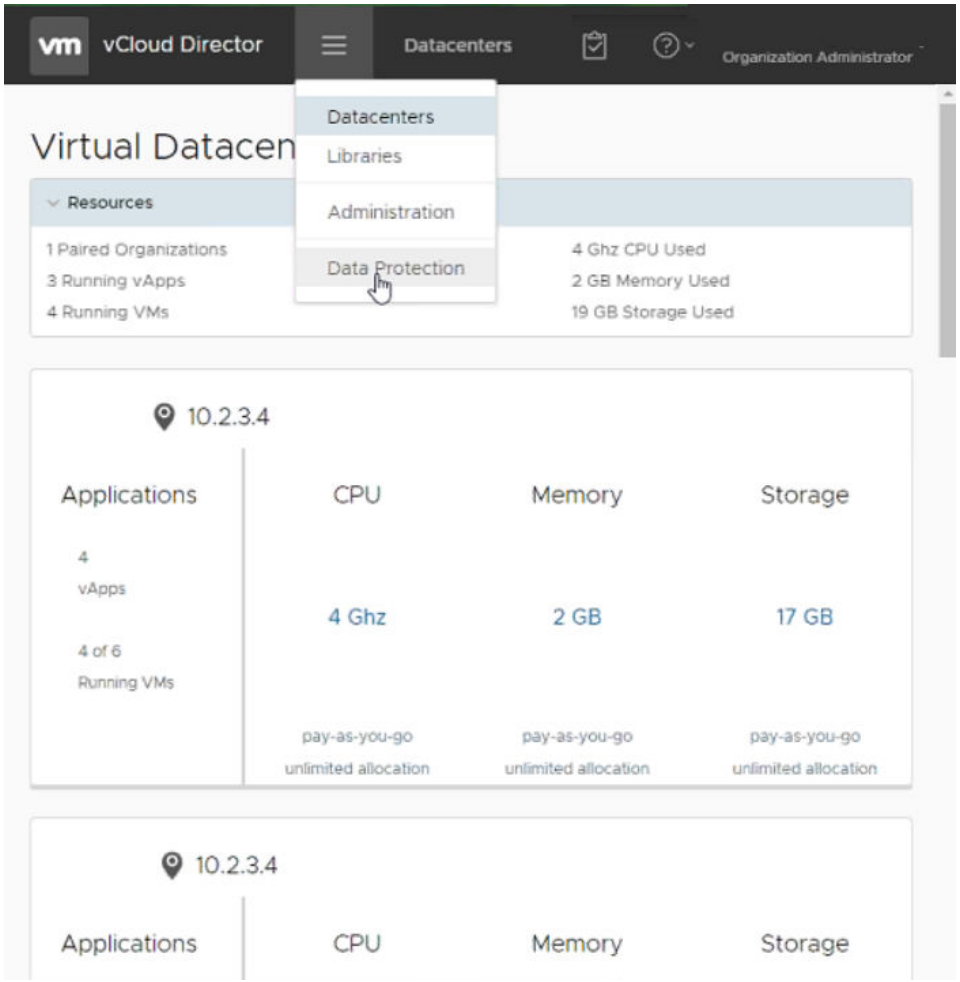

Figure 1. vCloud Director tenant portal UI main menu

The vCloud Director tenant portal UI dashboard is displayed. The dashboard provides an organization overview with policy quota details for ad hoc backup usage and a breakdown of the selected tenant's policies and protected VMs. The following illustration displays the dashboard.

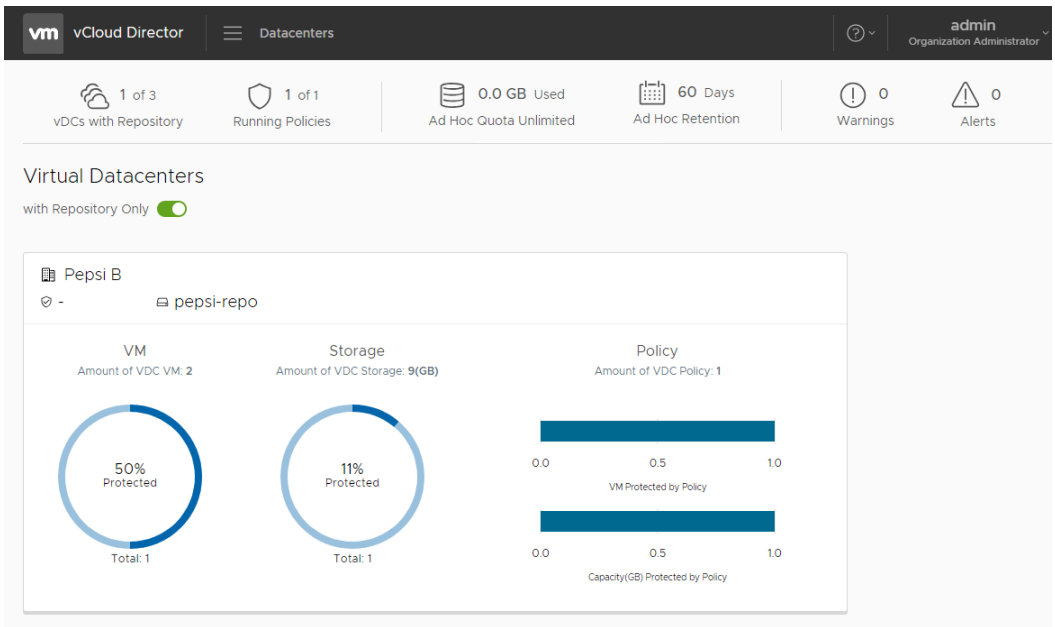

Figure 2. vCloud Director tenant portal UI dashboard

If a policy reaches full quota usage across all virtual datacenters (vDCs), the vCloud Director tenant portal UI generates a warning message. You can view warning messages by clicking **View** next to **Warnings** in the upper right corner of the UI. The **Warnings** dialog box appears and displays the warnings that have occurred. To clear these warnings, you must explicitly acknowledge them. To acknowledge a warning, click **Acknowledge** beside the warning message.

Use the left navigation pane to quickly browse to different panes in the UI. The navigation pane provides links that open other panes to perform tasks in the vCloud Director tenant portal UI.

To open the navigation pane, click a vDC in the **Virtual Datacenters** pane. The navigation pane opens and displays the available menu items, as shown in the following illustration:

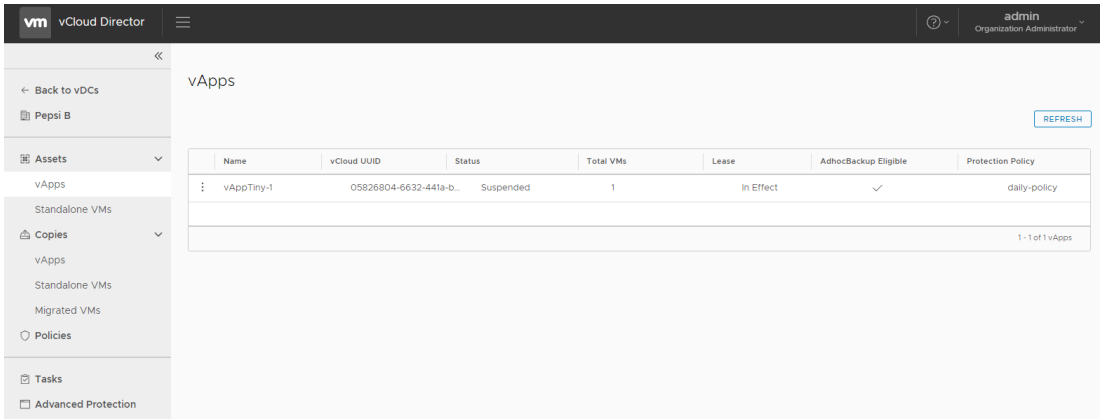

Figure 3. vCloud Director tenant portal UI navigation pane

The links in the navigation pane provide access to the following features in the vCloud Director tenant portal UI:

- **Back to vDCs**—Allows you to go back to the dashboard to select a different vDC to manage.
- **Assets | vApps**—Allows you to perform ad hoc backups of vApps, and manage protection policies for vApps.
- **Assets | Standalone VMs**—Allows you to perform ad hoc backups of stand-alone VMs, and manage protection policies for stand-alone VMs.
- **Copies | vApps**—Allows you to recover vApp backups to the original or a new location.
- **Copies | Standalone VMs**—Allows you to recover stand-alone VM backups to the original location or a new location.
- **Copies | Migrated VMs**—Allows you to recover migrated VM backups to a new location.
- **Policies**—Provides a list of policies applied to vApps and individual VMs. Details include information about policy settings (schedule, retention, and option set), policy quota status, and policy protection status.
- **Tasks**—When you initiate a VM or vApp backup or recovery operation, use this page to monitor the progress and status of the operation.
- **Advanced Protection**—Enables service providers to optionally supply a list of customized external resources to tenants. Service providers can include resources and descriptive information that are appropriate to their environment, or disable this page entirely. Service providers can customize all content on this page. Customize the Advanced Protection tab on page 21 provides additional information.

Policy

The **Policies** tab provides information about policy settings (schedule, retention, option set), policy quota status, and policy protection status. Note that you cannot add or modify policies by using the vCloud Director tenant portal UI.

About this task

Use the vCD DPE REST API to add policies to vApps and VMs. The *vCloud Director Data Protection Extension REST API Reference Guide* provides instructions for adding, configuring, and modifying backup policies.

Steps

1. Log in to the vCloud Director tenant portal UI:
   a. Open a web browser and go to the following URL:
      `https://vCloud_Director/tenant/tenant_name`
      where *vCloud_Director* is the IP address of the vCloud Director server.

b. Type the vCD OA credentials and organization.

2. From the main menu, select **Data Protection**.
   By default, the vCloud Director tenant portal UI displays the **Dashboard** tab, which provides an organization overview with policy quotas, and a breakdown of the selected tenant's policies and protected VMs.
3. To view available policies by Org VDC, click the vDC, and then click the **Policies** tab in the navigation pane.

   The **Policies** tab lists the following information in a tabular view:

   - Policy name
   - Description
   - Policy quota usage
   - Number of vApps that the policy protects
   - Number of stand-alone VMs that the policy protects
   - Whether the policy is the default
   - Policy status

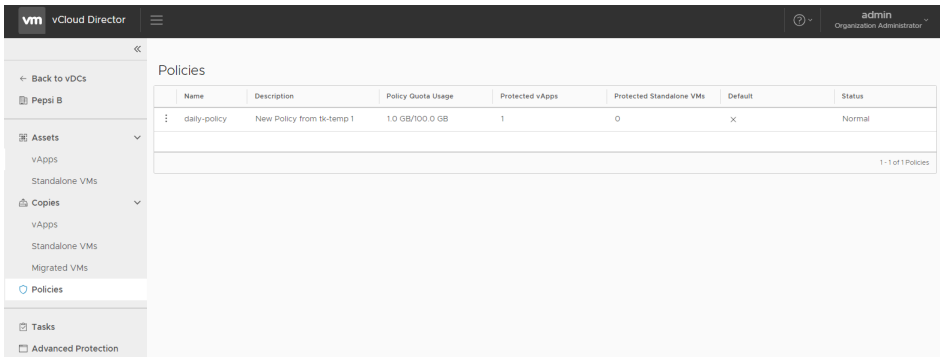

Figure 4. Policy tab

4. To change the Org VDC, click the **Back to vDCs** tab.
5. To view policy details, click ⋮ for the policy, and then click **Show Policy Detail**.

   The following table lists the sections of the **Policy Details** window.

Table 11. Policy details

Section	Details
Quota	• The policy name for which the quota is set • Policy quota usage, as percentage available and used • A message for any policy that exceeds the quota

Schedule	• Schedule type (includes Daily, Weekly, and so on)
	• Time zone for which the backup runs
	• Options:
	  ○ Scheduled times
	  ○ Number of hours to limit the backup run
	  ○ Activation constraints - delay until a particular date and end after a particular date

Retention	Retention period

Option Set	• vApp flags
	• VM flags
	• Protected vApps
	  ○ Name
	  ○ Protected VMs
	  ○ Unprotected VMs
	• Protected stand-alone VMs
	  ○ Name

Policy quotas

You can set policy quotas for both ad hoc backups and scheduled backups for vApps and VMs that belong to the vApp, and for any stand-alone VMs.

View the policy quota values and usage in the **Dashboard** tab of the vCloud Director tenant portal UI and in the **Policy Quota Usage** column of the **Policy** tab.

Ad hoc backup quotas

- Ad hoc backup quotas are set at the tenant level to limit the amount of data that is sent to Avamar before deduplication occurs.
- VDCs from the same tenant share quotas.
- Exceeding the quota limit prohibits additional backups that day for all VDCs from the tenant.
- The ad hoc backup quota value resets daily.
- Only the vCD SA can update ad hoc backup quotas.

Scheduled backup quotas

- The quota is set at the policy level on the vApp/VM front end size under the policy's protection.
- The policy quota can be set as enforced, or not enforced.
- Tenants that exceed the quota limit for enforced policy quotas generate an alert message in the **Virtual Datacenters** pane on the dashboard. The vCD DPE prohibits additional scheduled backups until the vCD SA intervenes.
- Tenants that exceed the quota limit for unenforced policy quotas generate a warning message in the **Virtual Datacenters** pane on the dashboard.
- Only the vCD SA can update the scheduled backup policy quotas.

Create and configure policy quotas

You can create and modify backup policy quotas by using the REST API.

About this task

The *vCloud Director Data Protection Extension REST API Reference Guide* provides details on how to create and modify a backup policy quota.

Perform an ad hoc backup in the vCloud Director tenant portal UI

You can back up one or more vApps or individual VMs at any time in the vCloud Director tenant portal UI by performing an ad hoc backup, also known as **Backup Now**.

Steps

1. Log in to the vCloud Director tenant portal UI:
   a. Open a web browser and go to the following URL:
      `https://vCloud_Director/tenant/tenant_name`
      where *vCloud_Director* is the IP address of the vCloud Director server.
   b. Type the vCD OA credentials and organization.
2. From the main menu, select **Data Protection**, and then click a vDC in the **Virtual Datacenters** pane on the dashboard.
3. To backup individual VMs or entire vApps:
   - To back up individual VMs, in the navigation pane, select the **Assets | Standalone VMs** tab.
   - To back up entire vApps, in the navigation pane, select the **Assets | vApps** tab.

   In this example, the **VApps** tab displays the list of available vApps for the current Org VDC.

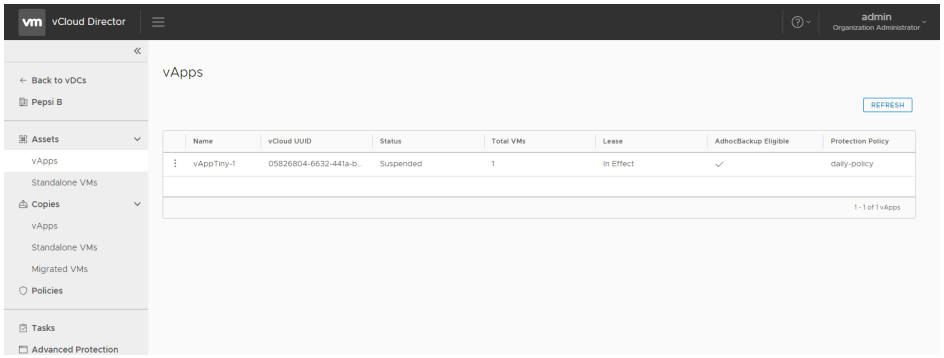

Figure 5. vApps tab

4. Ensure that the **Backup Eligibility** column contains a check mark for each VM or vApp that you want to back up.
5. Click ⋮ for the VM or vApp, and then click **Backup Now**.
6. To monitor progress, return to the main menu and select **Tasks** > **In progress**.

Restore a vApp or virtual machine to the original Org VDC in the vCloud Director tenant portal UI

Using the vCloud Director tenant portal UI, browse a list of vApp and VM backups that exist in vCloud Director for a specific organization, and then select the backup that you want to restore. Restore the vApps or VMs to their original locations on the Org VDC, or to new locations on the original Org VDC.

Prerequisites

Associate a backup repository with the Org VDC. Configure organizations and repositories on page 20 provides instructions.

Restoring to the original location on the Org VDC overwrites the existing (original) vApp or VM backup.

NOTE: The vCD DPE does not support fast-provisioning. If you try to restore a vApp that was fast-provisioned at the time of the backup, the restore fails.

Steps

1. Log in to the vCloud Director tenant portal UI:
   a. Open a web browser and go to the following URL:
      `https://vCloud_Director/tenant/tenant_name`
      where *vCloud_Director* is the IP address of the vCloud Director server.
   b. Type the vCD OA credentials and organization.
2. From the main menu, select **Data Protection**, and then select a vDC in the **Virtual Datacenters** pane on the dashboard.
3. To restore individual VMs or entire vApps:
   - To restore individual VMs, in the navigation pane, select the **Copies | Standalone VMs** tab.
   - To back up entire vApps, in the navigation pane, select the **Copies | vApps** tab.
4. Click ⋮ for the VM or vApp, and then click **Show Backups**.
5. Click ⋮ for the VM or vApp backup that you want to restore, and then select one of the following options from the drop-down to launch the appropriate restore wizard:
   - **Restore to Original**—Restores the VM or vApp to the original location on the original Org VDC.
   - **Restore to New**—Restores the VM or vApp to a new location on the original Org VDC.

Next steps

The topics Restore a vApp to its original location on page 44, Restore a virtual machine to its original location on page 44, and Restore a vApp to a new location on the Org VDC on page 46 describe how to complete the restore for each type by using the **Restore to Original vApp** and **Restore to New vApp** wizards.

Restore a vApp to its original location

Use the **Restore to Original vApp** wizard to complete the vApp restore.

Prerequisites

Power off the vApp before starting the restore.

About this task

NOTE: When you restore a vApp to its original location, the vCD DPE restores VMs that were deleted from the vApp after the backup. You can also select whether to restore VMs that have been added to the vApp since the last backup.

Steps

1. Click ⋮ for the vApp backup that you want to restore, and then click **Restore to Original**.

   The **Restore to Original vApp** wizard opens to the **Restore Type** page, with custom steps according to the restore type that you selected.
2. Select **vApp**.
3. Click **Next**.

   The wizard displays the **Virtual Machines** page.

   If the disk configurations for any VMs that are associated with a vApp have changed since the previous backup, the wizard displays a warning message similar to the following:

   ```
   Virtual machine(s) within this vApp will be recreated due to disk configuration changes.
   This will cause a change to the virtual machine's id.
   ```

   The vCD DPE re-creates these VMs with a new ID as part of the restore.
4. On the **Virtual Machines** page, select the virtual machine that you want to restore from the **Virtual Machines in Backup** pane.
5. Click **Next**.
   The wizard displays the **Start Order** page.
6. To restore the order in which the VMs were configured to start at the time of the backup, select **Restore start order**.
7. Click **Next**.
   The wizard displays the **Networks** page, and any network configurations that existed at the time of the backup.
8. If no networks were found in the backup, click **Finish**.
   A confirmation message indicates the start of the restore operation.
9. If networks were found, and you want to restore the network configurations:
   a. Select **Restore networks**, and then click **Next**.
      The **Network Connections** pane opens.
   b. If you want the network to connect when the vApp is restored, select **Connected**.
   c. Click **Finish**.
      A confirmation message indicates the start of the restore operation.
10. To monitor progress, return to the main menu and select **Tasks** > **In Progress**.
    You can also monitor progress from the vCenter by selecting **Inventory** > **VMs and Templates** > **EMCAvamarRestoresInProgress**.

Restore a virtual machine to its original location

Perform the following steps in the **Restore to Original vApp** wizard to complete a virtual machine restore. When you choose to restore a virtual machine, you can select from a list of virtual machines that are contained in the vApp. You can restore only one virtual machine at a time.

Prerequisites

Ensure that you power off the virtual machine before starting the restore.

Additionally, perform the following:

1. Log in to the **VMware vCloud Director UI**.
2. In the **System** tab, click **Administration**.
3. Under **System Settings** in the left navigation panel, click **General**.
4. In the **General** pane, scroll down to the **Miscellaneous** settings and ensure that **VM discovery enabled** is unselected.

Steps

1. Click the icon to the left of the **Backup Date/Time** column for the virtual machine backup that you want to restore, and select **Restore to Original**.
   The **Restore to Original vApp** wizard opens on the **Restore Type** page with custom steps according to the restore type selected (vApp or Virtual Machine).

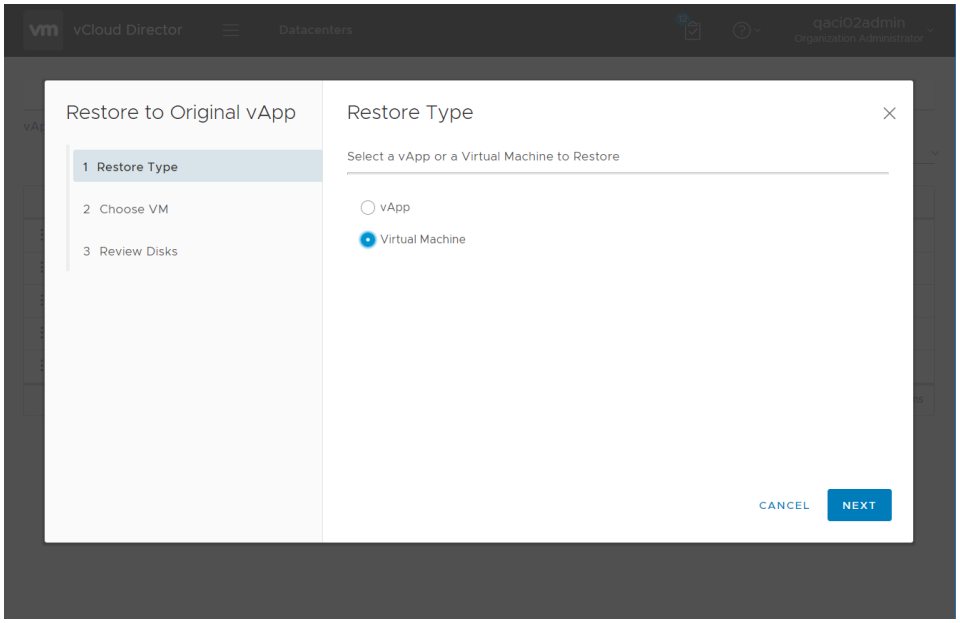

Figure 6. Restore to Original vApp wizard (Virtual Machine)

2. On the **Restore Type** page, select **Virtual Machine**, and click **Next**.
   The **Choose VM** page displays with a list of virtual machine backups in the vApp.
3. On the **Choose VM** page, select the virtual machine that you want to restore from the **Virtual Machines in Backup** pane, and click **Next**.
   The **Review Disks** page displays with the virtual machine's hard disks that are listed in the **Disks in backup** pane.
4. On the **Review Disks** page, verify that the virtual machine contains the hard disks that you want to restore. Additionally, you can unselect the **Restore virtual machine configuration (virtual NICs, CPUs, memory)** option on this page if you do not want to restore the virtual machine's configuration. This option is selected by default.

   If a configuration change has occurred on one or more of the virtual machine disks, the changed disks are indicated with a red warning icon and the following message is displayed:

   ```
   Unable to restore this virtual machine. The configuration of the disk(s) has changed since the backup.
   ```

   If a disk configuration has changed, you can choose from the following options:
   - Restore the vApp that contains this virtual machine. If you choose this option, all of the virtual machines in the vApp with changed disk configurations are recreated, and all other virtual machines in the vApp are restored.
   - Cancel the restore.
5. Click **Finish** to initiate the restore.
6. To view the restore progress, select the **Tasks** tab in the vCloud Director Tenant Portal UI.

   You can also review the restore progress in the vCenter server by selecting **Inventory** > **VMs and Templates** > **EMCAvamarRestoresInProgress**.

Restore a vApp to a new location on the Org VDC

Perform the following steps in the **Restore New vApp** wizard to complete the restore of a copy of the vApp and its contents to a new location on the original Org VDC.

Prerequisites

This procedure only applies to vApp restores, and cannot be performed for individual virtual machines. When a restore to a new location is performed for a vApp that contains a standalone virtual machine, note the following limitations:

- Restore to a new location for a standalone virtual machine results in a virtual machine without a network card. In this case, administrator intervention will be required. Note that if the vCloud Director version is lower than 9.1, performing a standalone virtual machine restore to a new location on the Org VDC is not supported.
- If a disk configuration change occurred on the standalone virtual machine, you can only restore this virtual machine to a new standalone virtual machine.

Steps

1. Click the icon to the left of the **Backup Date/Time** column for the virtual machine backup that you want to restore, and select **Restore to New**.
   The **Restore New vApp** wizard opens on the **New vApp Details** page.

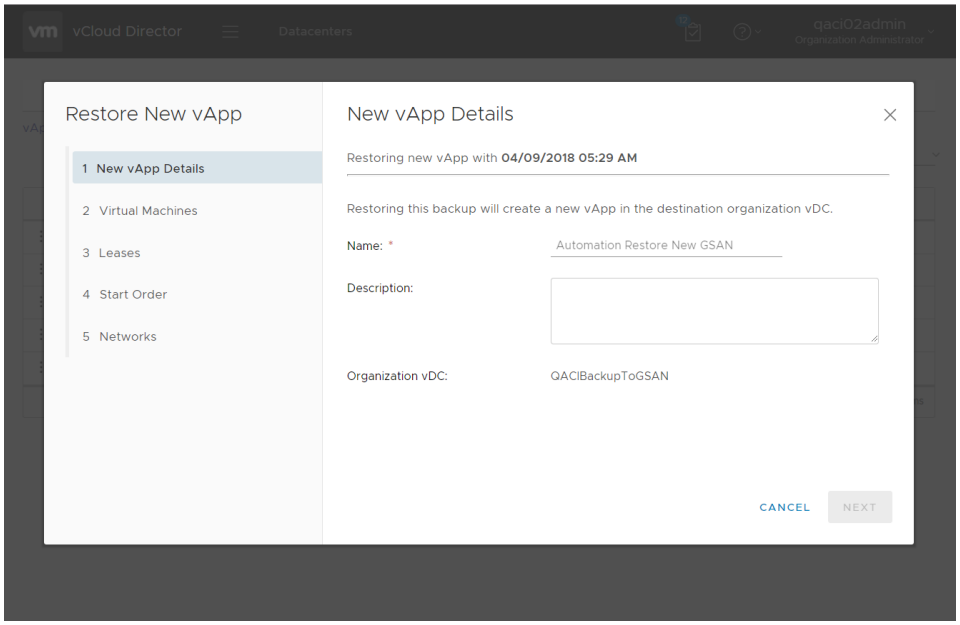

Figure 7. Restore New vApp wizard

2. On the **New vApp Details** page, type a name and a description for the new vApp, and click **Next**.
   The **Virtual Machines** page displays, with the **Virtual Machines in vApp** pane displaying the contents of the vApp. All virtual machines in the vApp are selected for restore by default.
3. On the **Virtual Machines** page, click **Next** to include all vApp contents in the restore, or unselect any virtual machines that you do not want to include in the vApp restore, and then click **Next**.
   The **Leases** page displays.
4. If you want to restore the runtime and storage leases when the vApp is restored, select **Restore leases**, and then click **Next**.
   The **Start Order** page displays, with the **Restore start order** option selected by default.
5. Leave the **Restore start order** option selected and click **Next**, or if you do not want to restore the order in which the virtual machines were configured to start when the backup occurred, unselect the **Restore start order** checkbox, and then click **Next**.
   The **Networks** page displays with any network configurations that existed when the backup occurred.
6. On the **Networks** page, if you want to restore the network configurations, select **Restore networks**, and then click **Next**.
   The **Network Connections** page displays.
7. On the **Network Connections** page, select **Connected** next to the entries in the **Network Connections** table if you want the network to reconnect when the vApp is restored.
8. Click **Finish** to initiate the restore.

A pop-up displays indicating that the restore is starting.

9. To view the restore progress, select the **Tasks** tab in the vCloud Director Tenant Portal UI.

   You can also review the restore progress in the vCenter server by selecting **Inventory** > **VMs and Templates** > **EMCAvamarRestoresInProgress**.

Restore a deleted vApp

You can restore vApps that have been deleted from vCloud Director since the previous backup. A deleted vApp will be restored to the Org VDC from which it was deleted.

Steps

1. In the **vCloud DIrector Tenant Portal UI**, select **Data Protection** from the main menu, and then select a vDC in the **Virtual Datacenters** pane.
2. To view all deleted vApps, in the navigation pane, select **Copies | vApps**.
   The **Status** column indicates which vApps have been deleted.
3. Click the icon to the left of the **Name** column for the deleted vApp that you want to restore, and select **Show Backups**.
   The backups that exist for that vApp are displayed on the **Backup Inventory** page.
4. On the **Backup Inventory** page, click the checkbox next to the backup that you want to restore.
5. Click **Restore to New**.
   The **Restore New vApp** dialog box appears.
6. On the **New vApp Details** page, type a name and a description for the vApp, and click **Next**.
   The VMs in the vApp are displayed on the **Virtual Machines in vApp** page.
7. Click **Next**.
   The **Leases** page appears.
8. If you want to restore the runtime and storage leases when the vApp is restored, select **Restore leases**.
9. Click **Next**.
   The **Start Order** page appears. The **Restore start order** option is selected by default.
10. Clear the **Restore start order** option only if you do not want to restore the order in which the virtual machines were configured to start when the backup occurred.
11. Click **Next**.
    The **Networks** page appears. Any network configurations that existed when the backup occurred are displayed.
12. If no networks were found in the backup, click **Finish** to initiate the restore.
13. If networks were found and you want to restore the network configurations:
    a. Select **Restore networks**, and click **Next**.
       The **Network Connections** page appears.
    b. Select **Connected** if you want the network to connect when the vApp is restored.
    c. Click **Finish** to initiate the restore.
       A pop-up message displays indicating that the restore has been started.
14. To monitor progress, return to the main menu and select **Tasks** > **In Progress**.

    You can also review the restore progress in the vCenter server by selecting **Inventory** > **VMs and Templates** > **EMCAvamarRestoresInProgress**.

6

Replication

Topics:

- Replicating vApp backups
- Managing replication policies
- Restoring replicated vApp backups
- Performing an adhoc replication

Replicating vApp backups

Replication is a feature that enables efficient, encrypted, and asynchronous replication of data stored on an Avamar server to another Avamar server that is deployed in a remote location.

About this task

The vCD Data Protection Extension provides the capability to replicate the vApp backups that it has created to a destination Avamar server. To replicate backups, you must create a replication policy and then apply the policy to the vApps whose backups you want to replicate.

The following sections provide instructions for performing all of the steps necessary to replicate vApp backups.

Steps

1. Open a web browser, and navigate to the following URL:
   `https://UI_server/vcp-ui-server/vcp-ui/`
   where *UI_server* is the IP address or FQDN of the UI server.
2. Log in using vCD SA credentials and organization (i.e. "system").
   The vCD OA cannot replicate vApp backups.

Creating a replication policy

Replication policies define the location to which vApp backups will be replicated, when the backups will be replicated, and how long the replicated backups will be retained.

Steps

1. On the vCD Data Protection Extension's main menu, select **Configure** > **Organizations**.
2. Click an organization in the **Organizations** list to expand the list of VDCs that it contains.
3. Select the Org VDC for which you want to configure a replication policy.
4. In the **Repositories** tab, select the active repository to display its details.
5. In the **Repository Details** pane, select the **Replication Policies** tab, and click **Add**.
   The **Create Replication Policy** wizard opens.
6. In the **Policy Details** pane:
   a. Type a name and a description for the replication policy.
   b. Select replication filter options:
      - **Encryption Enabled** — By default, encryption is enabled and set to high. Clear the **Encryption Enabled** checkbox only if you want to turn off encryption for this policy.
        NOTE: If you set Encryption to **None**, refer to the Avamar documentation on disabling the firewall settings.
      - **Bandwidth limit** — The network bandwidth, up to 2400 Mbps, that will be used for replication.

- **Maximum Backups per Account** — The maximum number of backups for each vApp that will be replicated by this policy. If you do not want to limit the number of backups, select **No limit**.
- **Backup Age Restriction** — The age of the backups that will be replicated by this policy. If you do not want an age restriction, select **None**.

c. Click **Next**.

7. In the **Destination** pane:
   a. For **Destination Address**, specify the IP address or the FQDN of the Avamar server to which you backups to be replicated.
   b. For **User Name**, specify the Avamar replication user account ID (repluser) that is used to log in to the destination Avamar server.
   c. For **Password**, specify the password for the Avamar replication user account ID (repluser).
   d. Click **Next**.
8. In the **Schedule** pane:
   a. Select the options for how often and what time you want the replication policy to run.
   b. Under **Activation Constraints**, select the date range during which you want the policy to ve available for use.
   c. Click **Next**.
9. In the **Retention** pane:
   a. If you want to change the retention period that was originally specified for the backup, select **Override backup expiration**, and select a new expiration time.
   b. Click **Next**.
10. In the **Summary** pane, review the replication policy settings. Use the **Back** button to make changes if necessary.
11. Click **Finish** when you are ready to save the policy.
    The new policy is displayed in the **Replication Policies** list.

Applying a replication policy to one or more vApps

You must apply a replication policy to the vApps whose backups you want to replicate.

Steps

1. On the vCD plug-in's main menu, select **Restore**.
2. Click an organization in the **Organizations** list to expand the list of VDCs that it contains.
3. Select a VDC in the list.
   The active repository is selected in the list of repositories, and the vApps in the VDC are listed in the **vApp Inventory** tab.
   NOTE: Replication policies are applicable only to the active backup repository. If this repository becomes inactive, the replication policies associated with it will be disabled and all vApps removed from them. If the repository is made active again, the replication policies will not be re-enabled and you will have to recreate them.

   The vApps in the VCD are listed in the **vApp Inventory** tab.
4. Click the checkbox beside one or more vApps that you want protected by the replication policy.
5. Click **Apply Replication Policy**, and select a policy in the list.
   If you want to create a new replication policy, select **Create Retention Policy** in the list, and follow the instructions provided in Creating a replication policy on page 48.

Managing replication policies

You can manage replication policies by setting a default replication policy for an Org VDC, and by modifying and deleting the policies.

About this task

Before using these instructions, log in to the vCD plug-in.

Steps

1. Open a web browser, and navigate to the following URL:

`https://UI_server/vcp-ui-server/vcp-ui/`

where *UI_server* is the IP address or FQDN of the UI server.

2. Log in using vCD SA credentials and organization (i.e. "system").
   The vCD OA cannot replicate vApp backups.

Setting a default replication policy

Optionally, you can set a replication policy as the default policy. The default policy will replicate the vApp backups in the chosen Org VDC that are available in the backup repository.

Steps

1. On the vCD Data Protection Extension's main menu, select **Configure** > **Organizations**.
2. Click an organization in the **Organizations** list to expand the list of VDCs that it contains.
3. Select the Org VDC for which you want to set a default replication policy.
4. In the **Repositories** tab, select the active repository to display its details.
5. In the **Repository Details** pane, select the **Replication Policies** tab to display the existing policies.
6. Click the checkbox next the policy that you want to set as default, and click **Default**.
   A green check mark appears next to the policy in the **Default** column.

Modifying a replication policy

You can modify a replication policy's name, description, schedule, and retention as needed.

Steps

1. On the vCD Data Protection Extension's main menu, select **Configure** > **Organizations**.
2. In the **Organizations** pane, click an organization to expand the list of VDCs that it contains.
3. Select the Org VDC for which you want to modify a replication policy.
4. In the **Repositories** tab, select the active repository to display its details.
5. In the **Repository Details** pane, select the **Replication Policies** tab to display the existing policies.
6. Select the replication policy that you want to modify.
   The policies settings are displayed in the **Replication Policy** pane.
7. In the **Replication Policy** pane, select the tab containing the information that you want to modify.
8. Make the necessary modifications, and click **Update**.

Deleting a replication policy

If you have specified a default replication policy, you can delete that policy. When a default policy exists, you can delete a non-default replication policy, and any vApps that are assigned to that policy will automatically be reassigned to the default policy.

About this task

NOTE: You cannot delete a non-default replication policy with attached vApps if no default policy exists.

Steps

1. On the vCD Data Protection Extension's main menu, select **Configure** > **Organizations**.
2. In the **Organizations** pane, click an organization to expand the list of VDCs that it contains.
3. Select the Org VDC for which you want to delete a replication policy.
4. In the **Repositories** tab, select the active repository to display its details.
5. In the **Repository Details** pane, select the **Replication Policies** tab to display the existing policies.
6. Click the checkbox next the policy that you want to delete, and click **Delete**.

7. Click **Yes** to confirm the deletion.

Restoring replicated vApp backups

To restore replicated backups, you must configure the Avamar server that is storing the backups as a backup appliance. Then you must create a restore-only repository using the backup appliance as the source and the Org VDC to which you want to restore as the destination. After the backup appliance and the repository have been created, you can then restore replicated backups.

About this task

The following sections provide instructions for performing all of the steps necessary to restore vApp backups that have been replicated.

Before using these instructions, log in to the vCD Data Protection Extension.

Steps

1. Open a web browser, and navigate to the following URL:
   `https://UI_server/vcp-ui-server/vcp-ui/`
   where *UI_server* is the IP address or FQDN of the UI server.
2. Log in using vCD SA credentials and organization (i.e. "system").
   The vCD OA cannot replicate vApp backups.

Configuring a backup appliance

You must configure a backup appliance using the Avamar server that is storing the replicated backups.

Follow the instructions in Add a backup appliance on page 19, specifying the URL and the credentials of the backup gateway that is associated with the Avamar server on which the replicated backups are being stored.

Creating a restore-only repository

Restoring a replicated vApp backup requires the use of a restore-only repository.

Follow the instructions in Create a restore-only repository on page 35.

When you create the repository, select the backup appliance that contains the replicated backup that you want to restore.

For the destination Org VDC, select the VDC to which you want to restore the replicated backup.

Restoring replicated backups

Follow the instructions in Restore the vApp using the restore-only repository on page 36.

Select the restore-only repository that you created for restoring replicated backups.

Performing an adhoc replication

To perform an adhoc replication, you must either have created an enabled replication policy and applied it to the vApps whose backups you want to replicate, or you must have assigned a default replication policy, which will replicate all vApp backups in the chosen Org VDC.

Steps

1. On the vCD Data Protection Extension's main menu, select **Configure** > **Organizations**.
2. Click an organization in the **Organizations** list to expand the list of VDCs that it contains.
3. Select the Org VDC whose vApp backups you want to replicate.

4. In the **Repositories** tab, select the active repository to display its details.
5. In the **Repository Details** pane, select the **Replication Policies** tab, and click the check box next to the replication policy that you want to execute.
6. Click **Replicate Now**.

7

Reporting

Topics:

- Introduction
- Reporting system functional overview
- Reporting system database schemas
- Reporting capability
- Sample reports

Introduction

Reporting capability is provided for the vCD Data Protection Extension as an optional reporting server and reporting database, which are deployed as single instances per vCloud. To make use of the reporting feature, you must install the reporting server and then deploy the reporting database. The reporting database enables you to generate reports, based on your specific use cases, using SQL statements. The reports must be displayed using your own reporting tools.

This chapter describes the schemas used by the reporting database, and provides example reports, including the SQL statements that were used to generate them.

The following list provides some considerations that you should keep in mind when deploying the reporting server:

- A stand-alone reporting Postgres database server is recommended. Using the vCP Postgres database server is not supported.
- The database server's event tables only hold a system-enforced maximum of 120 days of event activity. However, the `backup_inventory` table record expiration is governed by the `retention_date`, so backup data in the `backup_inventory` table will exist up to the `retention_date`.

  If you want to maintain a history of all activity, you can supply a database with a separate `sync_job` to gather and accumulate the data from the event tables.

- Once the reporting server has successfully connected to the vCloud Director RabbitMQ, then vCP-related events will be delivered to a queue for the reporting server to consume. If you shut down the reporting server, the queue will fill up as events occur and, with nothing to consume the events from the queue, the available disk space on the RabbitMQ server may fill up.

  If you want to decommission a reporting server permanently, identify the RabbitMQ server that the reporting server is using, and use the RabbitMQ administrative UI to remove the VCPReportingEventQueue.

- When the lockbox is created (for example, when the reporting server is started for the first time), an error message is sent to the log file, indicating that the lockbox file was not found. This is not an error.

Reporting system functional overview

The vCD Data Protection Extension platform publishes notification messages on an AMQP-compliant (typically RabbitMQ) messaging server for important system events. The events that the reporting system observes include:

- vAppBackupEvent
- vAppRestoreEvent
- vappReplicationEvent
- vAppRetentionUpdateEvent
- vAppBackupDeleteEvent

For more information, see the *vCloud Protector Message Bus Event Notifications Specification*.

These notifications form the only source of information for the reporting database. The reporting server subscribes to the notifications and publishes them to your database instance. The reporting server is a tcServer application that runs on a

separate VM and requires access to a Postgres database instance. Once the database is populated by the reporting server, you can author your own reports by interfacing directly with this database instance.

The reporting database consists of the following tables:

- T_VAPP_BACKUP_INVENTORY
- T_VAPP_BACKUP_EVENT
- T_VAPP_RESTORE_EVENT
- T_VAPP_REPLICATION_EVENT
- T_VAPP_RETENTION_UPDATE_EVENT
- T_VAPP_DELETE_BACKUP_EVENT

Based on the subscribed notifications, the reporting server maintains a Backup Inventory table, T_VAPP_BACKUP_INVENTORY, and a list of tables that map to the events. The vApp backup inventory is a list of vApp backups that are known to exist by the reporting server, and are current (not expired).

Reporting system database schemas

The following sections describe the database schemas used by the reporting server. Database table key column names are indicated with an asterisk.

T_VAPP_BACKUP_INVENTORY table

When a vAppBackupEvent occurs, a corresponding vApp backup row is created in the T_VAPP_BACKUP_INVENTORY table. Once a vApp backup inventory row exists, if a vAppRetentionUpdateEvent occurs for that vApp, it will result in an update to the corresponding row in the T_VAPP_BACKUP_INVENTORY table. If a user deletes a vApp backup, or if the vApp backup expires, then the vApp backup is removed from the T_VAPP_BACKUP_INVENTORY table.

Replications are not added as backups in the T_VAPP_BACKUP_INVENTORY table.

Table 12. T_VAPP_BACKUP_INVENTORY table schema

Column name	Column data type/ size	Description
* vcloud_id	varchar(50)	The vcd provided cloud guid of the backup. Compound db key.
* vapp_id	varchar(50)	The vcd provided vApp guid of the backup. Compound db key.
* vapp_backup_id	varchar(50)	MC provided backup id (sequence). Compound db key.
backup_type	varchar(20)	Adhoc or scheduled
user_id	varchar(60)	The vcd provided user guid for the user who performed the backup
vapp_name	varchar(128)	The name associated with the vapp_id
org_name	varchar(128)	The name associated with the org_id of the backup
org_id	varchar(50)	The vcd-provided org guid for the org of the backup
org_vdc_name	varchar(128)	The name associated with the org_vdc_id
org_vdc_id	varchar(50)	The vcd provided orgVdc guid of the orgVdc of the backup
owner_id	varchar(50)	The vcd provided owner guid. The user_id of the owner of the vApp being backed up
owner_name	varchar(128)	The name associated with the owner_id
backup_vm_count	integer	Number of VMs existing in the vApp
vms_selected	integer	Number of VMs selected for this backup (set adhoc or as a result of exclusion criteria)
actual_vms	integer	Number of VMs in this backup
backup_host	varchar(120)	Hostname of the backup system (e.g. AVE hostname)

Table 12. T_VAPP_BACKUP_INVENTORY table schema (continued)

Column name	Column data type/ size	Description
backup_store_name	varchar(60)	GSAN or DataDomain system name
backup_store_id	varchar(50)	GSAN or DataDomain system id
bytes_modified	bigint	The size of the backup, which should closely track bytes protected
bytes_processed	bigint	Should be equal to the size of the VM
start_time	timestamp	Start time of the vApp backup (from BG)
end_time	timestamp	End time of the vApp backup (from BG)
effective_retention	timestamp	How long to keep the vApp backup (when the vApp backup will expire)

T_VAPP_BACKUP_EVENT table

The following table describes the `T_VAPP_BACKUP_EVENT` table.

Table 13. T_VAPP_BACKUP_EVENT table schema

Column name	Column data type/size	Description
* task_id	varchar(60)	The vcd assigned task guid. Db Key.
vcloud_id	varchar(50)	The vcd provided cloud guid
event_version	varchar(20)	The VCP provided event version id (e.g. 1.0)
user_id	varchar(60)	The vcd provided user guid for the user who performed the backup
event_time	timestamp	The VCP provided timestamp of event emission
backup_type	varchar(20)	Adhoc or scheduled
vapp_id	varchar(50)	The vcd provided vApp guid of the vApp being backed up
vapp_name	varchar(128)	The name associated with the vapp_id
org_name	varchar(128)	The name associated with the org_id of the backup
org_id	varchar(50)	The vcd provided org guid for the org of the backup
org_vdc_name	varchar(128)	The name associated with the org_vdc_id
org_vdc_id	varchar(50)	The vcd provided orgVdc guid of the orgVdc of the backup
owner_id	varchar(50)	The vcd provided owner guid. The user_id of the owner of the vApp being backed up
owner_name	varchar(128)	The name associated with the owner_id
vapp_backup_id	varchar(50)	MC provided backup id (sequence)
backup_vm_count	integer	Number of VMs existing in the vApp
vms_selected	integer	Number of VMs selected for this backup (set adhoc or as a result of exclusion criteria)
actual_vms	integer	Number of VMs in this backup
backup_host	varchar(256)	Hostname of backup system (e.g. AVE hostname)
backup_store_name	varchar(256)	GSAN or DataDomain system name
backup_store_id	varchar(50)	GSAN or DataDomain system id
bytes_modified	bigint	Matches the size (in bytes) of the backup, which should closely track bytes protected

Table 13. T_VAPP_BACKUP_EVENT table schema (continued)

Column name	Column data type/size	Description
bytes_processed	bigint	Should equal the size (in bytes) of the VM
start_time	timestamp	Start time of the vApp backup (from BG)
end_time	timestamp	End time of the vApp backup (from BG)
effective_retention	timestamp	How long to keep the vApp backup (when the vApp backup will expire)

T_VAPP_RESTORE_EVENT table

The following table describes the `T_VAPP_RESTORE_EVENT` table.

Table 14. T_VAPP_RESTORE_EVENT table schema

Column name	Column data type/size	Description
* task_id	varchar(60)	The vcd-assigned task guid. Db Key.
vcloud_id	varchar(50)	The vcd-provided cloud guid of the cloud to which the vApp was restored
vapp_id	varchar(50)	The vcd-provided vApp guid of the new instance of the vApp being restored
event_version	varchar(20)	The VCP-provided event version id (for example, 1.0)
user_id	varchar(60)	The vcd-provided user guid for the user who performed the restore
event_time	timestamp	The VCP-provided timestamp of event emission
restore_type	varchar(20)	Single vm, rollback, new
vapp_name	varchar(128)	The name associated with the vapp_id
org_name	varchar(128)	The name associated with the org_id of the restored vApp
org_id	varchar(50)	The vcd-provided org guid for the org of the restored vApp
org_vdc_name	varchar(128)	The name associated with the org_vdc_id
org_vdc_id	varchar(50)	The vcd-provided orgVdc guid of the orgVdc of the restored vApp
owner_id	varchar(50)	The vcd-provided owner guid. The user_id of the source vApp's owner
owner_name	varchar(128)	The name associated with the owner_id
vapp_backup_id	varchar(50)	The MC provided backup id (sequence) of the vApp being restored
vapp_id_dst	varchar(50)	The vcd-provided restore destination vApp guid
vapp_name_dst	varchar(128)	The restore destination vapp name associated with the vapp_id_dst
vcloud_id_dst	varchar(50)	The vcd-provided restore destination cloud guid
org_name_dst	varchar(128)	The restore destination org name associated with the org_id_dst
org_id_dst	varchar(50)	The vcd-provided restore destination org guid
org_vdc_name_dst	varchar(128)	The restore destination org_vdc name associated with the org_vdc_id_dst
org_vdc_id_dst	varchar(50)	The vcd-provided restore destination orgVdc guid
owner_id_dst	varchar(50)	The vcd-provided owner guid. The user_id of the owner of the destination vApp

Table 14. T_VAPP_RESTORE_EVENT table schema (continued)

Column name	Column data type/size	Description
owner_name_dst	varchar(128)	The restore destination owner name associated with the owner_id_dst
source	varchar(20)	The vapp_id of the vApp (the restore is obtained from this vApp)
backup_vm_count	integer	Number of VMs existing in the vApp
vms_selected	integer	Number of VMs selected for this backup (set adhoc or as a result of exclusion criteria)
backup_host	varchar(256)	Hostname of backup (for example, AVE hostname)
backup_store_name	varchar(256)	GSAN or DataDomain system name
backup_store_id	varchar(50)	GSAN or DataDomain system id
bytes_restored	bigint	Matches the size of the backup, which should closely track bytes protected
bytes_processed	bigint	Should equal to size of the VM
start_time	timestamp	Start time of the vApp backup (from BG)
end_time	timestamp	End time of the vApp backup (from BG)

T_VAPP_REPLICATION_EVENT table

The following table describes the `T_VAPP_REPLICATION_EVENT` table.

Table 15. T_VAPP_REPLICATION_EVENT table schema

Column name	Column data type/size	Description
* vcloud_id	varchar(50)	The vcd-assigned cloud guid. Compound Db Key.
* task_id	varchar(60)	The vcd-assigned task guid. Compound Db Key.
parent_task_id	varchar(60)	The vcd-provided parent task guid. Task id of the overall replication job
parent_user_id	varchar(60)	The vcd-provided parent user guid. UserId of the user that initiated the adhoc replication
event_version	varchar(20)	The VCP-provided event version id (for example, 1.0)
user_id	varchar(60)	The vcd-provided user guid for the user who performed the replication
event_time	timestamp	The VCP-provided timestamp of event emission
replication_type	varchar(20)	Adhoc or scheduled
vapp_id	varchar(50)	The vcd-provided vApp guid
vapp_name	varchar(128)	The name associated with the vapp_id
org_name	varchar(128)	The name associated with the org_id of the replication
org_id	varchar(50)	The vcd-provided org guid for the org of the replication
org_vdc_name	varchar(128)	The name associated with the org_vdc_id
org_vdc_id	varchar(50)	The vcd-provided orgVdc guid of the orgVdc of the source of the replicated vApp
owner_id	varchar(50)	The vcd-provided owner guid. The user_id of the owner of the vApp being replicated
owner_name	varchar(128)	The name associated with the owner_id

Table 15. T_VAPP_REPLICATION_EVENT table schema (continued)

Column name	Column data type/size	Description
destination_host	varchar(256)	The name of the host to which the vApp will be replicated.
bytes_processed	bigint	Should equal the size of the VM
bytes_modified	bigint	Matches the size of the backup, which should closely track bytes protected
start_time	timestamp	Start time of the vApp backup (from BG)
end_time	timestamp	End time of the vApp backup (from BG)

T_VAPP_RETENTION_UPDATE_EVENT table

When an update backup retention event occurs, the reporting server writes a row in the T_VAPP_RETENTION_UPDATE_EVENT table and attempts to update the corresponding backup row in the T_VAPP_BACKUP_INVENTORY table. If the reporting server is started after activity has occurred, such as vApp backups, the vapp backup row may not exist in the T_VAPP_BACKUP_INVENTORY table. If this is the case, a warning message is logged; however, this message is no cause for alarm, because it is expected under such conditions.

Table 16. T_VAPP_RETENTION_UPDATE_EVENT table schema

Column name	Column data type/size	Description
* vcloud_id	varchar(50)	The vcd-provided cloud guid. Compound Db Key.
* vapp_id	varchar(50)	The vcd-provided vApp guid. Compound Db Key.
* vapp_backup_id	varchar(50)	The MC-provided backup id (sequence) of the vApp getting its retention updated. Compound Db Key.
* event_time	timestamp	The VCP-provided timestamp of event emission. Compound Db Key.
event_version	varchar(20)	The VCP-provided event version id (for example, 1.0)
user_id	varchar(60)	The vcd provided user guid for the user who updated the backup retention
vapp_name	varchar(128)	The name associated with the vapp_id
org_name	varchar(128)	The name associated with the org_id
org_id	varchar(50)	The vcd provided org guid
org_vdc_name	varchar(128)	The name associated with the org_vdc_id
org_vdc_id	varchar(50)	The vcd provided orgVdc guid
owner_id	varchar(50)	The vcd provided owner guid. The user_id of the owner of the vApp being updated
owner_name	varchar(128)	The name associated with the owner_id
effective_retention	timestamp	How long to keep the vApp backup (when the vApp backup will expire)

T_VAPP_DELETE_BACKUP_EVENT table

When a delete backup event occurs, the reporting server writes a row in the T_VAPP_DELETE_BACKUP_EVENT table and attempts to remove the backup from the T_VAPP_BACKUP_INVENTORY table. If the reporting server is started after activity has occurred, such as vApp backups, the vApp backup row may not exist in the T_VAPP_BACKUP_INVENTORY table. If this is the case, a warning message is logged; however, this message is no cause for alarm, because it is expected under such conditions.

Table 17. T_VAPP_DELETE_BACKUP_EVENT table schema

Column name	Column data type/size	Description
* vcloud_id	varchar(50)	The vcd-provided cloud guid. Compound Db key.
* vapp_id	varchar(50)	The vcd-provided vApp guid. Compound Db key.
* vapp_backup_id	varchar(50)	The MC-provided backup id (sequence) of the vApp being restored. Compound Db key.
event_version	varchar(20)	The VCP-provided event version id (for example, 1.0)
user_id	varchar(60)	The vcd-provided user guid. The id of the user performing the vApp backup deletion.
event_time	timestamp	The VCP-provided timestamp of event emission
vapp_name	varchar(128)	The name associated with the vapp_id
org_name	varchar(128)	The name associated with the org_id
org_id	varchar(50)	The vcd-provided org guid. The org_id of the vApp backup being deleted.
org_vdc_name	varchar(128)	The name associated with the org_vdc_id
org_vdc_id	varchar(50)	The vcd-provided orgVdc guid. The org_vdc_id of the vApp backup being deleted.
owner_id	varchar(50)	The vcd-provided owner guid. The user_id of the owner of the vApp being deleted.
owner_name	varchar(128)	The name associated with the owner_id

Reporting capability

You can use the vCD Data Protection Extension's reporting database to create a variety of different reports based on your use cases.

Reports can be based on inventory-derived information and on historical information. Various optional ordering criteria can be added, in any combination, to any of the inventory or historical reports, such as endTime, backupType/replicationType, userId, ownerId, bytesProcessed, or bytesModified. Also, an optional date range filter (to match end times or event times) can be added to some queries.

vApp backup inventory based reports

High-level categories for reports based on backup inventory are described in the following table.

Table 18. vApp backup inventory reports

Report	Description
Backup Inventory	At the Org, OrgVdc and vApp levels, the Backup Inventory report shows the vApp backups in the inventory. This report is useful to see what backups exist, and at what level.
Backup Coverage	At the Org or OrgVdc levels, the Backup Coverage report shows protected vApps for which backups have not occurred since a specified time in the past. This report has the potential to return no records.
Frequent User Backup	At the Org level, the Frequent User Backup report shows a list of users and backup counts in descending order. This report is useful to determine which users are "heavy users," or which users may be abusing the system.
Owner Backup Capacity	At the Org level, for the most recent backups only, the Owner Backup Capacity report shows a list of owners and bytesProcessed in descending order.

Table 18. vApp backup inventory reports (continued)

Report	Description
Protected Bytes	At the Org or OrgVdc levels, for the most recent backups only, the Protected Bytes report shows the sum of bytesProcessed for all vApps in descending order.
Partial Backup	At the Org level, the Partial Backup report shows only the partial backups. Partial backups are defined as backups where the number of selected VMs is not equal to the number of actual VMs.
Backup Duration	At the Org level, the Backup Duration report shows vApp backups whose duration exceeds a given amount of time. This report has the potential to return no records. It also enables you to identify backups that are taking longer than they should, and can help you find performance or configuration problems, or errors.

Historical (event) reports

The historical (or event) reports display information about what happened, by whom, and when. Historical reports can be used to investigate potential errors, or performance and configuration problems that are encountered in an inventory report.

- vApp Backup History – shows vApp backup events per Org, OrgVdc, or vApp.
- vApp Restore History – shows vApp restore events per Org, OrgVdc, or vApp.
- vApp Replication History – shows vApp replication events per Org, OrgVdc, or vApp.
- vApp Backup Delete History – shows vApp backup delete events per Org, OrgVdc, or vApp.
- vApp Retention Update History – shows vApp backup retention update events per Org, OrgVdc, or vApp.

Sample reports

The following sample reports provide the SQL used to generate the reports, followed by actual output from the database. If the report body cannot fit in one table, then multiple tables are used. These examples do not represent all of the reports that can be generated; they are only to be used as a starting point.

Some queries, such as the sample chargeback report query, may have date (or other) input parameters.

NOTE: Although the reporting server is equipped with the SQL client "psql," connecting to the database and running the sample queries is outside of the scope of this documentation.

Chargeback report

An example query to generate a Chargeback report is provided below:

```
SELECT org_id, org_name, count(*) as total_vapp_backups,
sum(bytes_processed) as total_bytes_processed,
sum(bytes_modified) as total_bytes_modified
FROM "public"."t_vapp_backup_inventory"
where end_time between
to_date('01 Feb 2014 00:00:00', 'DD Mon YYYY HH24:MI:SS') and
to_date('28 Feb 2014 00:00:00', 'DD Mon YYYY HH24:MI:SS')
group by org_id, org_name order by org_name;
```

Example output is shown in the following table.

Table 19. Example Chargeback report output

org_id	org_name	total_ vapps	total_bytes_ processed	total_bytes_ modified
225c1b3d-5ed4-4334-9272-9d3d7982e52c	OrgOne	10	172590321543	331156
dfa11cce-3fd4-40f3-a907-4e1e7f2d885f	OrgTwo	294	1292938745117	1284358

Table 19. Example Chargeback report output (continued)

org_id	org_name	total_ vapps	total_bytes_ processed	total_bytes_ modified
5c12f524-a3ba-4069-8e67-0 906e99e39e6	OrgThree	458	515123187028	1089082
f803a5cb-643c-43fc-92e8-71a328f e11fb	OrgFour	698	1202376589103	1800366

Frequent User Backup report

An example query to generate a Frequent User Backup report is provided below:

```
select
org_id, org_name, user_id, count(*) as total_vapp_backups
from "public"."t_vapp_backup_event"
group by org_id, org_name, user_id
order by count(*) desc;
```

Example output is shown in the following table.

Table 20. Example Frequent User Backup report output

org_id	org_name	user_id	total_vapp_ backups
f803a5cb-643c-43fc-92e8-71a328fe 11fb	OrgFour	urn:vcloud:user:f2ebd2c1-7406-409 f-b55a-cb39248e7cbb	66
5c12f524-a3ba-4069-8e67-0906e99e39e6	OrgThree	urn:vcloud:user:f2ebd2c1-7406-409 f-b55a-cb39248e7cbb	30
dfa11cce-3fd4-40f3-a907-4e1e7f2d885f	OrgTwo	urn:vcloud:user:f2ebd2c1-7406-409 f-b55a-cb39248e7cbb	16
6ab4f14a-79cb-4219-a5da-c660759cef40	OrgFive	urn:vcloud:user:0b839f8f-6ff2-489 0-8d6a-3b61c8bc2656	2

Partial Backup report

An example query to generate a Partial Backup report is provided below:

```
select
org_id, org_name, org_vdc_id, org_vdc_name, vapp_id, vapp_name,
owner_id, owner_name, vapp_backup_id, backup_type, backup_vm_count,
vms_selected, actual_vms, backup_host, bytes_modified,
bytes_processed, start_time, end_time, effective_retention
from "public"."t_vapp_backup_event" where
vms_selected != actual_vms;
```

Example output is shown below using multiple tables in order to show all of the columns.

Table 21. Example 1: Partial Backup report output

org_id	org_name	org_vdc_id	org_vdc_name
5c12f524-a3ba-4069-8e67-0906e99e39e6	OrgThree	35c55d20-5e69-4f34-b1ff-75a33786f79f	OrgVDCThree
f803a5cb-643c-43fc-92e8-71a328fe11fb	OrgFour	56654356-c979-4181-8fb8-a85a7fdbb070	OrgVDCFour
dfa11cce-3fd4-40f3-a907-4e1e7f2d885f	OrgTwo	3ec28a93-becd-4024-a768-6cc858f37d47	OrgVCDTwo

Table 21. Example 1: Partial Backup report output (continued)

org_id	org_name	org_vdc_id	org_vdc_name
5c12f524-a3ba-4069-8e67-0906e99e39e6	OrgFour	56654356-c979-4181-8fb8-a85a7fdbb070	OrgVDCFour

Table 22. Example 2: Partial Backup report output

vapp_id	vapp_ name	owner_id	owner_ name	vapp_ backup_id
bbba8d3f-970c-421e-affa-b3d586bc49b4	vApp_AA	59e0be76-8faf-4d1c-9416-65075f0e4b41	system	309
7f416ff4-edb7-4bbb-848e-acf0fc62e4bb	vApp13	d4bf78d0-a225-4189-9c43-7a38f6b29a0e	system	296
7e561360-5443-464c-ba0b-46503ad5ebb6	vApp_ system_5	e05f6860-62d6-4b5f-8c03-873195aee759	system	323
7f416ff4-edb7-4bbb-848e-acf0fc62e4bb	vApp13	d4bf78d0-a225-4189-9c43-7a38f6b29a0e	system	302

Table 23. Example 3: Partial Backup report output

backup_type	backup_vm_ count	vms_ selected	actual_ vms	backup_host
scheduled	2	2	1	host1.example.com
scheduled	2	2	1	host1.example.com
scheduled	2	2	1	host1.example.com
scheduled	2	2	1	host1.example.com

Table 24. Example 4: Partial Backup report output

bytes_modified	bytes_processed	start_time	end_time	effective_retention
27120	8592078196	3/4/2014	3/4/2014	5/3/2014
32493	8592078196	3/4/2014	3/4/2014	5/3/2014
33692	8592078196	3/4/2014	3/4/2014	5/4/2014
27101	8592078196	3/4/2014	3/4/2014	5/4/2014

Backup Duration report

An example query to generate a Backup Duration report is provided below:

```
with t_duration as (select ((extract (epoch from end_time)) - (extract
(epoch from start_time))) as duration
from "public"."t_vapp_backup_inventory")
select
t_duration.duration, org_id, org_name, org_vdc_id, org_vdc_name,
vapp_id, vapp_name, owner_id, owner_name, vapp_backup_id, backup_type,
backup_vm_count, vms_selected, actual_vms, backup_host, bytes_modified,
bytes_processed, start_time, end_time, effective_retention
FROM
"public"."t_vapp_backup_inventory" as vbe, t_duration
where t_duration.duration > 1000
order by duration desc;
```

Example output is shown below using multiple tables in order to show all of the columns.

Table 25. Example 1: Backup Duration report output

duration	ord_id	org_name	org_vcd_id	org_vdc_ name
4413.308	f803a5cb-643c-43fc-92e8-71a328fe11fb	OrgFour	56654356-c979-4181-8fb8-a85a7fdbb070	OrgVDCFour
4413.308	5c12f524-a3ba-4069-8e67-0906e99e39e6	OrgThree	35c55d20-5e69-4f34-b1ff-75a33786f79f	OrgVDCThree
4413.308	225c1b3d-5ed4-4334-9272-9d3d7982e52c	OrgOne	cdf1febb-537e-431d-9ad3-e4755d64bfc9	OrgVDCOne
4413.308	f803a5cb-643c-43fc-92e8-71a328fe11fb	OrgFour	56654356-c979-4181-8fb8-a85a7fdbb070	OrgVDCFour

Table 26. Example 2: Backup Duration report output

vapp_id	vapp_ name	owner_id	owner_ name	vapp_ backup_ id
19df594c-2741-4db5-987f-f6980b3a994c	vApp01	d4bf78d0-a225-4189-9c43-7a38f6b29a0e	system	914
6e3459e5-caf2-4444-9b66-9df3d09295ef	vApp_CC	59e0be76-8faf-4d1c-9416-65075f0e4b41	system	963
c4eeda5e-158b-481e-8b88-deceb6a74e1b	vapp1	7f66b954-90b5-45de-8787-9f761498f72d	system	151
d1e4139b-dfe6-4341-ad8a-690d33f58698	vApp11	d4bf78d0-a225-4189-9c43-7a38f6b29a0e	system	917

Table 27. Example 3: Backup Duration report output

backup_type	backup_ vm_count	vms_ selected	actual_ vms	backup_host
scheduled	1	1	1	host2.example.com
scheduled	1	1	1	host2.example.com
adhoc	2	2	2	host2.example.com
scheduled	1	1	1	host2.example.com

Table 28. Example 4: Backup Duration report output

bypes_ modified	bytes_ processed	start_time	end_time	effective_ retention
24792	8592078196	2/20/2014	2/20/2014	4/21/2014
27611	17210764641	2/26/2014	2/26/2014	4/27/2014
33331	17210764641	2/19/2014	2/19/2014	4/20/2014
24832	8592078196	2/20/2014	2/20/2014	4/21/2014

8

Operations

Topics:

- Shutting down and restarting vCD Data Protection Extension services
- Changing the lockbox passphrase
- Changing IP addresses on vCD Data Protection Extension cells
- Deleting backup repositories for deleted Org VDCs
- Storage mapping for replicating Data Domain vCD backups

Shutting down and restarting vCD Data Protection Extension services

Follow these instructions to cleanly shut down and re-start the vCD Data Protection Extension's services in the event of a planned power outage or for maintenance purposes.

Prerequisites

Make sure that no backups, restores, or replications are running.

Steps

1. To shut down the services:
   a. On each backup appliance, set `<IsEnabled>false</IsEnabled>` to disable ad hoc and scheduled backups and restores.
   b. Shut down vCP plug-in components in the following order by shutting down the VMs:
      - VCP UI server
      - vCP server cell
      - Backup gateway VM (to ensure that no pending updates are being passed)
      - Reporting server
   c. Follow the vCD shutdown instructions from VMware to properly shut down the vCD architecture.
   d. Follow the instructions in the *Avamar Administration Guide* to properly shut down the AVE.
2. To restart the services:
   a. Start vCLoud, including all relevant databases.

      Refer to the instructions from VMware for additional details.
   b. Start PostgreSQL.
   c. Start the RabbitMQ VM.
   d. Start Avamar/AVE using the following command:

      ```
      dpnctl start all
      ```
   e. Start the vCD Data Protection Extension components in the following order:
      - Reporting server
      - Backup gateway VM
      - vCP server cell
      - VCP UI server
   f. On each backup appliance, set `<IsEnabled>true</IsEnabled>` to enable ad hoc and scheduled backups and restores.

Changing the lockbox passphrase

This section describes how to change the lockbox passphrase in the `bootstrap.properties` file on the Cell server.

Prerequisites

To change the lockbox passphrase, you need the following information:

- The location of the `bootstrap.properties` file. Typically, this file is located in `/etc/vcp`.
- The previous passphrase; for example, the one that was provided during initialization.
- The new passphrase, which must meet the following requirements:
  - Be at least 8 characters long
  - Contain at least one uppercase alphabetic character
  - Contain at least one lowercase alphabetic character
  - Contain at least one numeric character
  - Contain at least one of the following non-alphanumeric characters:

    !@#%&*_-=+|~

Steps

1. On the Cell server, open the `/etc/vcp/bootstrap.properties` file in a text editor.
2. Provide the following information in the `bootstrap.properties` file:

```
cst.pw=original_passphrase
cst.changePw=new_passphrase
```

   NOTE: You must provide both the original and new passphrases, or the password will not change.

3. Save and close the file.
4. Restart the Cell server.

Changing IP addresses on vCD Data Protection Extension cells

This procedure describes how to change the IP addresses on the vCD Data Protection Extension cells.

Steps

1. Power off the VMs.
2. On each VM, edit the settings to change the IP address.
3. Verify that the DNS is updated with the FQDNs to point to the new IP addresses.
4. Power on the VMs.
5. Verify that the VMs can communicate and that their respective services are running.

Deleting backup repositories for deleted Org VDCs

About this task

When you delete an Org VDC from vCloud, you should also delete the repositories that were associated with the Org VDC by the vCD Data Protection Extension.

Steps

1. Delete the vApps from the Org VDC.

The vCD Data Protection Extension detects the deletion, and automatically removes the vApps from any backup and replication policies.

2. Enter the following command to list the policies associated with the Org VDC:

   `GET /api/admin/extension/vdc/vdcId/BackupPolicies`

3. Enter the following command for each policy:

   `DELETE /api/admin/extension/vdc/vdcId/BackupPolicy/policyId`

   Once the vApps and policies have been deleted from the repository, you can delete the repository.

4. Enter the following command to list the repositories associated with the VDC:

   `GET /api/admin/extension/vdc/vdcId/BackupRepositories`

5. Enter the following command for reach repository:

   `DELETE /api/admin/extension/vdc/vdcId/BackupRepository/policyId`

6. If the backup appliance has no other repositories or vCenter registrations, delete it as well.

Storage mapping for replicating Data Domain vCD backups

About this task

This section describes how to map storage to specific Data Domain systems using Avamar Administrator. Refer to the *Avamar and Data Domain System Integration Guide* for additional information.

In this scenario, backups are being replicating from Source Avamar A to Destination Avamar B. Destination Avamar B has several Data Domains attached to the AVE.

After the first replication, Destination Avamar B will contain the domain structure under the /REPLICATE/Source_Avamar_A tree. Once all of the vApp client accounts are replicated, you can send future backups from particular domains into specific Data Domains on Destination System B.

Steps

1. Log in to Avamar Administrator, and select the **Replication** tab.
2. In the **Replication** window, select the **Storage Mapping** tab.
3. Right-click anywhere in the tab's white space, and select **New Storage Mapping**.
   The **Select a Domain** dialog box appears.
4. Browse to a domain and select it from the tree.
5. From the **Map to Data Domain System** list, select the Data Domain system to use as the replication target.
6. Click **OK**.

9

Migration

Topics:

- Migration
- Migrate virtual machines
- Manage orphaned virtual machines
- Restore from backups of migrated virtual machines

Migration

Migration simplifies the process of introducing the vCD DPE into an environment where vCloud Director users previously protected VMs and cloud resources directly with an Avamar server.

The migration process locates existing vCloud Director VM backups on the backup appliance, and enables tenant users to restore from those backups by using the vCloud Director tenant portal UI.

The migration process may not be able to associate some VMs to known Org VDCs. For example, if you deleted the Org VDC from vCloud Director while retaining the VM backups on the backup appliance. These VMs are called orphaned VMs.

The vCD SA must assign orphaned VMs to active Org VDCs, so that the vCloud Director tenant portal UI lists backups of these VMs.

Migrate virtual machines

About this task

The migration process starts in one of two ways:

- For a new deployment, migration runs automatically when you create the first backup repository on a backup appliance.
- For an upgrade from a version that does not support migration, you must manually trigger the migration for each organization.

Steps

1. Log in to the vCD DPE UI plug-in:
   a. Open a web browser and go to the following URL:

      `https://`*`UI_server`*`/vcp-ui-server/vcp-ui/`

      where *UI_server* is the IP address or FQDN of the UI server.

   b. Type the vCD SA credentials and organization ("system").

      The vCD OA cannot perform this task.
2. From the main menu, select **Configure** > **Organizations**.
3. Select the organization that you want to migrate from the **Organizations** list.

   The organization must be registered before you can start migration.

   If the organization has not been migrated, the **Migrate** button is active.
4. Click **Migrate**.
5. To monitor progress, return to the main menu and select **Tasks** > **In Progress**.

   The task name is `Migrate Virtual Machines`.

Manage orphaned virtual machines

Steps

1. Log in to the vCD DPE UI plug-in:
   a. Open a web browser and go to the following URL:

      `https://UI_server/vcp-ui-server/vcp-ui/`

      where *UI_server* is the IP address or FQDN of the UI server.

   b. Type the vCD SA credentials and organization ("system").
      The vCD OA cannot perform this task.
2. From the main menu, select **Configure** > **Backup Appliances**.
3. In the **Backup Appliances** pane, select the backup appliance that performed the migration.
4. Select the **Orphaned VMs** tab.
   The vCD DPE lists the orphaned VMs.
5. Select an orphaned VM from the list by clicking the checkbox next to the list entry.
   You can select multiple orphaned VMs.
6. Click **Assign**.
   The vCD DPE displays the **Select Destination Org VDC** dialog box.
7. To expand the list of VDCs, click the arrow beside an organization's name.
8. Select the Org VDC to which you want to assign the previously selected orphaned VMs, and then click **OK**.
   The **Select Destination Org VDC** dialog box closes. The list of orphaned VMs refreshes to reflect changes to the **Organization** and **Org VDC** fields.
9. To unassign previously assigned VMs:
   This step applies only if the list entry that you selected in the **Orphaned VMs** tab contained assigned orphaned VMs.
   a. Click **Unassign**.
      The vCD DPE displays a confirmation dialog box.
   b. Click **OK**.
      The vCD DPE clears the Org VDC from the selected orphaned VMs.
10. To hide assigned VMs from the list of orphaned VMs, click **Hide Assigned**.

Restore from backups of migrated virtual machines

About this task

Using the vCloud Director tenant portal UI, you can browse a list of migrated VM backups for a specific organization, and select the backup that you want to restore. You can only restore the VM to a new location on the original Org VDC.

Steps

1. Log in to the vCloud Director tenant portal UI.
2. From the main menu, select **Data Protection**, and then select a vDC in the **Virtual Datacenters** pane in the dashboard.
3. In the navigation pane, select **Copies | Migrated VMs**.
4. Click the icon to the left of the **Name** column for the VM.
5. Click **Show Backups**.
   The vCloud Director tenant portal UI displays a list of available backups.
6. Click the icon to the left of the **Backup Date/Time** column for the VM backup that you want to restore, and then click **Restore to New**.
   The vCloud Director tenant portal UI displays the **Restore New VM** dialog box
7. Provide a name for the new VM and a description, if necessary.
8. Click **FINISH**.
   The restore process begins.
9. To monitor progress, return to the main menu and select **Tasks** > **In Progress**.

A

vCD Components Backup and Recovery

This appendix includes the following topics:

Topics:

- Backup steps
- Recovery steps

Backup steps

This section describes how to back up the components of the vCloud Director Data Protection Extension.

Prerequisites

- Set up a dedicated AVE for backing up and restoring the plug-in's virtual machines. This AVE is separate from the AVE being used for VApps and VM backups running on the vCloud.
- Set up an ImageProxy for the AVE on the same host where the plug-in's virtual machines are located, and register it with the dedicated AVE.
- Register the cloud management vCenter (maintaining the ESX Host running the plug-in's components) with the AVE.

Steps

1. Shut down the plug-in's VMs in the following order:

   Backup Gateway
   vCP server
   Reporting server
   UI server
   Postgres DB
   RabbitMQ

2. In the MC GUI for the dedicated AVE (the first item in "Before you begin"), add the Backup Gateway, vCP server, Reporting server, UI server, Postgres DB, and RabbitMQ VMs as clients under the vCenter by using the following steps:
   a. Navigate to **Administration** > **Account Management**.
   b. Right-click **vCenter**, and select **New Clients** > **VMs & Templates**.
   c. Select the Backup Gateway, vCP server, Reporting server, UI server, Postgres DB, and RabbitMQ VMs.
   d. Click **OK**.
3. Back up the VMs by using the following steps for each VM:
   a. In the MC GUI, select the **Backup & Restore** tab.
   b. In the upper-left pane, select the vCenter IP where you specified the plug-in's VMs as clients.
   The VM clients display in the lower-left pane.
   c. Select a VM in the list, and then select the **Backup** tab.
   d. Back up the VM.
   e. Repeat the previous four steps for each of the plug-in's VMs.

Recovery steps

This section describes how to recover components of the vCloud Director Data Protection Extension that have been backed up.

Steps

1. Restore the backed up VMs to new VMs (Backup Gateway, vCP server, Reporting ser, UI server, Postgres DB, RabbitMQ) by using the following steps:
   a. In MC GUI, select the **Backup & Restore** tab.
   b. In the upper-left pane, select the vCenter IP where you specified the plug-in's VMs as clients.
      The VM clients display in the lower-left pane.
   c. Select a VM in the list, and then select the **Restore** tab.
   d. Select a backup to restore.
   e. Select the **All virtual disks** checkbox.
   f. Right-click **All virtual disks**, and select **Restore Now**.
   g. In the **Restore Option** dialog box, select **Restore to new virtual machine** > **Configure Destination**.
   h. Select the location where the VM will be restored, specify the name of the VM, and click **OK**.
      The restore process begins.
2. When the restore has completed, power on the VM that has been restored.
3. Verify that the Postgres and Rabbitmq services have started by entering the following commands:

   ```
   service rabbitmq-server status
   pg_ctl status
   ```

4. Perform the following steps on the VCP server, Backup Gateway, and Reporting servers.
   a. Enter the following command to open the bootstrap.properties file on the VM:

      ```
      vim /etc/vcp/bookstrap.properties
      ```

   b. Add the following two key=value pairs and set the cst.overWrite variable to true in the file:

      ```
      cst.pw=<Original_Passphrase>
      cst.resetLb=true
      cst.overWrite==true
      ```

   c. Save and close the file.
   d. Enter the following command to restart the VCP server, Backup Gateway, and Reporting services:

      ```
      service vcpsrv restart
      ```

5. Re-register the vApp Proxy on the Backup Gateway node with the desired AVE.
6. Power on the vCP UI server VM.

B

Troubleshooting

Topics:

- Database Issues
- Log file locations
- vApp backups fail when virtual machines contained in vApp use special characters in the virtual machine name
- Additional vApp with "Discovered..." in name might appear in vCloud Director after a standalone virtual machine restore
- The lockbox becomes unreadable on the Cell server and needs to be reset
- SSL errors

Database Issues

Database issues include problems such as not being able to add or delete backup or replication policies, or seeing incomplete lists of policies or repositories.

You can use a GUI application like pgAdmin to browse the tables in your PostgreSQL database; however, we strongly recommend that you contact EMC Professional Services to troubleshoot database-related issues for you.

Log file locations

Log file locations are listed as follows:

- Cell server logs are located in `/var/log/vcp/vcpserver.log`
- Backup Gateway logs are located in `/var/log/vcp/vcpbg.log`
- UI logs are located in `/var/log/vcp/vcpui.log`

The corresponding tcServer logs for each server are listed as follows:

- For the Cell and UI servers, tcServer logs are located in `/var/opt/emc/vcp/vcpsrv/logs`
- For the Backup Gateway server, tcServer logs are located in `/var/opt/emc/vcp/vcpbg/logs`

Information about tcServer log files is provided in the vFabric documentation, which can be used to diagnose issues where the EMC product web app fails to deploy at the tcServer level (which might result in empty `/var/log/vcp` logs).

vApp backups fail when virtual machines contained in vApp use special characters in the virtual machine name

For vApps that contain virtual machines with special characters in the virtual machine name, backups fail with the error `The file with extension '.vmx' could not be located on the VM.`. The following special characters prevent the `.vmx` file from being created:

& %26
+ %2B
/ %2F
= %3D
? %3F
% %25
\ %5C

~ %7E
] %5D

Ensure that you rename any datastore, folder, and datacenter names that use these special characters before performing the backup.

Additional vApp with "Discovered..." in name might appear in vCloud Director after a standalone virtual machine restore

After performing a standalone virtual machine restore in the **vCloud Director Tenant Portal UI**, an additional vApp with "Discovered..." in the name might appear in the **VMware vCloud Director**.

To resolve this issue, perform the following steps:

1. Log in to the **VMware vCloud Director UI**.
2. In the **System** tab, click **Administration**.
3. Under **System Settings** in the left navigation panel, click **General**.
4. In the **General** pane, scroll down to the **Miscellaneous** settings and ensure that **VM discovery enabled** is unselected.

If the additional vApp with "Discovered…" in the name has already been created, you can delete the entry.

The lockbox becomes unreadable on the Cell server and needs to be reset

Prerequisites

You must have the original lockbox passphrase to perform this procedure.

About this task

The lockbox may become unreadable on the Cell server in the following situations, resulting in a log message that states "unable to obtain credentials:"

- A VM was migrated onto another host that has different characteristics from the original host (for example, CPU type).
- A VM was cloned and its configuration was changed (for example, CPU type or memory allocation).
- One or more operating system values were changed (for example, hostname).

Steps

1. On the Cell server, open the `/etc/vcp/bootstrap.properties` file in a text editor.
2. Provide the following information in the bootstrap.properties file:

   ```
   cst.pw=<ORIGINAL_PASSPHRASE>
   cst.resetLb=true
   ```

3. Save and close the file.
4. Restart the Cell server.

SSL errors

Missing certificates and hostname mismatches will cause the following errors during backup appliance creation:

`SSL Error: Peer not authenticated` – This error indicates that the certificate is missing.

`SSL Error: mismatch between hostname specified` – This error indicates that the host names provided in the certificate for the client and server do not match.

C

Centralized Logging

Topics:

- Introduction
- Unencrypted logging setup
- Example rsyslog firewall configuration
- Setting up SSL security
- Example vFabric Postgres server logging configuration

Introduction

This chapter describes the procedures for configuring centralized logging on each component of the vCloud Director Data Protection Extension (vCloud Protector, backup gateway and backup gateway plug-in). The rsyslog server must be configured prior to the rsyslog configuration, and the Certificate Authority's (CA) certificate must be provided to all of the rsyslog clients.

The requirements specific to rsyslog configuration are listed as follows:

- The SLES 11 SP3 operating system is being used.
- The person installing the rsyslog components has root privileges.
- The installer must configure their rsyslog server and provide the CA's certificate to all rsyslog clients.
- The installer must configure the port for the centralized logger on the rsyslog server's firewall.

NOTE: We assume that the customer already has a centralized logging server installed, such as log-insight or equivalent, and that they want to add the vCloud Director Data Protection Extension components to this server. If not, a simple logging server can be created on an existing linux host running rsyslog. In the examples, we use a SLES 11 SP3 VM. You may need to adjust the server-related instructions below as needed for your specific logging server setup.

Unencrypted logging setup

The following sections describe how to set up the server and the client for unencrypted logging.

Setting up the server

Steps

1. Log in to the central logging server as root, and edit `/etc/rsyslog.d/remote.conf`.
2. Find and uncomment the following lines:

```
$ModLoad imudp.so # provides UDP syslog reception
$UDPServerRun 514 # start a UDP syslog server at standard port 514
```

3. Save and close the file.
4. Enter the following command to restart the rsyslog service:

   `rcsyslog restart`
5. Configure iptables and firewall for UDP and TCP port 514 (and optionally TCP 10514) as described below.
6. On the server, execute **`tail -f /var/log/messages`** to monitor log messages.

   You can verify that the server is receiving messages using the `netcat/nc` utility from the client:

```
netcat -u hostname 514
```

```
Type some text here and it should appear in the /var/log/messages file on the host
Type Ctrl-C to stop testing.
```

You can optionally enable support for TCP messages instead of UDP. Refer to the rsyslog documentation for this option.

Configuring clients

Steps

1. Log into the client as root and edit the `/etc/rsyslog.d/remote.conf` file.
2. Locate the following lines:

```
# remote host is: name/ip:port, e.g. 192.168.0.1:514, port optional
#*.* @@remote-host
```

3. Add the following line below those in step 2:

   `*.* @ip_of_server:514 # forward all local syslog messages to remote host`

   where *ip_of_server* is the IP Address or FQDN of the logging server.

   If you set up the server to listen on TCP (or if you enable SSL as shown in the next section) enter the following line instead:

   `*.* @@ip_of_server:10514 # forward all local syslog messages to remote host`

   The two @@ designates TCP instead of UDP and the port is changed

   This will forward all of the log messages that are handled by the client's rsyslog system to the central logging server.

4. Enter the following command to restart the rsyslog server:
   `rcsyslog restart`

Results

After you complete these steps, basic setup should be complete. Verify that log entries from the client appear in the logging server's `/var/log/messages` file.

Example rsyslog firewall configuration

The following example illustrates how to modify the SLES 11 SP3 firewall to open ports 514 and 10514 for rsyslog. You must perform this procedure as root, and it only needs to be performed on the logging server. The clients do not need this configuration step.

Steps

1. Log into the rsyslog server as root and create the following file using a text editor such as vi or Vim:
   `/etc/sysconfig/SuSEfirewall2.d/services/rsyslog`
2. Add the following information to the file:

```
##Name: rsyslog
## Description Open port for rsyslog server running on this host
UDP="514"
TCP="10514"
```

3. Change the permissions on the rsyslog file to 644 by entering the following command:
   `chmod 644 /etc/sysconfig/SuSEfirewall2.d/services/rsyslog`
4. Add the new service to the firewall by entering the following command:
   `/sbin/yast2 firewall services add service=service:rsyslog zone=EXT`

Setting up SSL security

The following sections describe how to set up the server and the client for SSL security.

Server configuration

Steps

1. Log into the rsyslog server as root and edit the following file:

   /etc/rsyslog.d/remote.conf

2. Find the section titled “Encrypting Syslog Traffic with TLS” and uncomment the lines that start with ‘#$’.

```
# -- TLS Syslog Server:
## make gtls driver the default
$DefaultNetstreamDriver gtls
#
## certificate files
$DefaultNetstreamDriverCAFile /etc/rsyslog.d/ca.pem
$DefaultNetstreamDriverCertFile /etc/rsyslog.d/server_cert.pem
$DefaultNetstreamDriverKeyFile /etc/rsyslog.d/server_key.pem
#
$ModLoad imtcp # load TCP listener
#
$InputTCPServerStreamDriverMode 1 # run driver in TLS-only mode
$InputTCPServerStreamDriverAuthMode anon # client is NOT authenticated
$InputTCPServerRun 10514 # start up listener at port 10514
```

3. Create a set of SSL certificates, and place them in the `/etc/rsyslog.d/ca.pem`, `/etc/rsyslog.d/server_cert.pem` and `/etc/rsyslog.d/server_key.pem`.

   Use openssl or equivalent tools for creating these certificates.

4. Enter the following command to restart the rsyslog server:

   rcsyslog restart

Client Configuration

Steps

1. Log into the client as root and edit the following file:

   `/etc/rsyslog.d/remote.conf`

2. Find the section titled “TLS Syslog Client” and uncomment the lines that start with ‘#$’.

```
# -- TLS Syslog Client:
## certificate files - just CA for a client
$DefaultNetstreamDriverCAFile /etc/rsyslog.d/ca.pem
#
## set up the action
$DefaultNetstreamDriver gtls # use gtls netstream driver
$ActionSendStreamDriverMode 1 # require TLS for the connection
$ActionSendStreamDriverAuthMode anon # server is NOT authenticated
*.* @@(o)ip_of_server:10514 # send (all) messages
```

3. Copy the `/etc/rsyslog.d/ca.pem` file from the central logging server to a `/etc/rsyslog.d/ca.pem` file on the client.

4. Enter the following command to restart the rsyslog server:

   rcsyslog restart

Example vFabric Postgres server logging configuration

This is an example of how to forward the contents of log files from the filesystem (that do not go through the syslog facility) to the central logging server. This example uses vFabric Postgres, but it can easily be adapted to other applications.

These lines can go be added to `/etc/rsyslog.conf`, or you can add a file in `/etc/rsyslog.d/`*`application`*`.conf`, where *application* can be an reasonable name, as long as it sorts alphabetically before `remote.conf`; otherwise the contents of these files will not be sent to the central logging server.

```
$ModLoad imfile #needs to only be done once, even for multiple files
$InputFileName /var/lib/pgsql/data/pg_log/postgresql-Fri.log #specifies the path of the
file
on the client
$InputFileTag postgres_log #give a tag to the log file being sent
$InputFileStateFile /var/spool/rsyslog/statefile1 #statefile keeps track of which parts
of
monitored file have already been processed. Each individual file needs a unique
statefile(n) file.
$InputRunFileMonitor
```

Repeat the second through the fifth lines for each log file. You can add more files to monitor by using the same process, but you must change the statefile(n) name for each additional file.

D

Password Rotation

Topics:

- Introduction
- vCD Data Protection Extension service rotatable passwords
- Rotation scenarios
- Scheduling password rotation
- deployvm.sh

Introduction

Many data-center owners and system administrator require the rotation of passwords. This appendix contains a high level overview of the password rotation process. The information is not all-inclusive, but it attempts to describe how to rotate passwords within the vCD Data Protection Extension's service.

The term password is defined in general terms within this appendix to be synonymous with authentication information (user credentials) and not necessarily with authorization information (feature access).

vCD Data Protection Extension service rotatable passwords

The vCD Data Protection Extension service uses three types of passwords: VM, CST, and Connection.

VM passwords

The VM password is provided to gain access to the vCD Data Protection Extension's virtual machines. These VMs contain plug-in components, which include, but are not limited to, VCP cell, Gateway, and Reporting Server. VM passwords are stored in two locations; locally and externally. The next two sections provide information about password storage and usage. The VM password is used to log in to VMs, normally provided by the OS user login, which requires a username and password.

Local

Local passwords are used for local accounts and services. The passwords are stored within and protected by the operating system.

External

External password information is stored within an external server; for example, an LDAP server.

NOTE: The vCD Data Protection Extension does not support automated OS LDAP client configuration, but the following information is provided for educational purposes.

Within the LDAP server scenario, there are two user authentication possibilities when logging in to the server using a VM password:

- The LDAP server provides a challenge-response value to the LDAP client based on the login information. If both challenge-response values match, the login is successful.

- The LDAP client creates an encrypted connection, such as TLS, to the server where the username and password are provided to the client. The client then compares the provided information with login input. If the information matches, the login is successful.

Connection passwords

Connection passwords are initially stored locally within the CST lockbox. In some cases the credentials are copied and stored securely into a database.

CST password

The CST password is used to access administrative functionality of the CST lockbox. The CST (RSA Common Security Toolkit) lockbox is an RSA product that contains at its foundation an encrypted/protected file that contains key/value pairs. The lockbox within the vCD Data Protection Extension service contains a number of key/value pairs used for vCD Data Protection Extension configuration. However, due to the nature of the CST lockbox, there are scenarios (for example, operating system upgrade where kernel values have changed, or CST upgrades) where the lockbox may no longer be readable, and thus access to CST administrative functionality is required to repair the CST lockbox. Because of this, the CST password must be rotated.

Local

The CST password and all key/value pairs are securely stored internally within the CST lockbox.

External

Within CST, there is a CST Authentication Service that can be configured to use an LDAP authority for authentication.

NOTE: Currently, the vCD Data Protection Extension does not support the CST LDAP Authentication.

Avamar credentials change

The Avamar Plugin for vCloud Director has two components that communicate with the backend Avamar system. These are both located on the Backup Gateway VM.

In the event that the Avamar username/password is changed, both of these applications need to be updated with the new credentials.

Updating the backup gateway

Steps

1. Stop the VCP backup gateway.
2. Run the following command on the backup gateway VM:
   `service vcpbg stop`
3. Change the password in Avamar.
4. Log in to the VMA VM and make the appropriate modification in the `<hostname>.properties` file. The modification must reflect the following:
   - The `<hostname>.properties` file must be equivalent to the backup gateway VM that was stopped.
   - Within the `<hostname>.properties` file, the `ave.user` and `ave.pword` keys' values must be changed to match the new Avamar username and password.
5. Run the `deployvm.sh` command with the appropriate values and the `-update` argument on the command line. For example:

   `./deployvm.sh --vm.hostname=<hostname> --vm.type=gateway -update`

   Note that there are two dashes (`--`) preceding the `vm.hostname=hostname=<hostname>` and `vm.type=gateway` options.

Updating the vApp Proxy

Steps

1. Stop the vApp Proxy.
2. On the backup gateway VM, run the following commands to stop the vApp proxy:

   `cd /usr/local/avamarclient/etc`

   `./initproxyappliance.sh stop`
3. Log in to the Avamar Management Console and select the **Administration** tab.
   The **Administration** screen opens on the **Account Management** tab.
4. Locate the vApp Proxy under clients, and do the following:
   a. In the list of domains in the upper-left pane, select the domain "clients."
      The list of clients registered under this domain are displayed in the lower-left pane.
   b. Locate the client with the name that matches the FQDN of the backup gateway. For example, gateway.example.com.
      This is the client that represents the registered vApp Proxy.
   c. Right-click the client located in step b, and select **Delete Client**.
   d. Click **Yes** when you are asked to confirm the deletion. You will need to confirm twice to proceed with the delete.
   e. When you see the confirmation that the client was deleted, click **OK**.
5. Log in to the backup gateway VM again, and run the following commands to register the proxy to Avamar using the new password:

   `cd /usr/local/avamarclient/etc`

   `./initproxyappliance.sh start --mcsaddress=<Avamar-FQDN> --avdomain=clients`

   Where *<Avamar-FQDN>* is the FQDN of the Avamar server.

   Note that there are two dashes (`--`) preceding the `--mcsaddress=<Avamar-FQDN>` and `--avdomain=clients` options.
6. Answer the following prompts when they appear:

   `Enter MC Account Name:` Enter the new username of the Avamar account.

   `Enter password for (Your username:` Enter the corresponding password for the Avamar account.

   You will see the message, `Registration Complete`, followed by two other lines. This confirms that the vApp Proxy has been successfully registered with Avamar using the new credentials.

   The Avamar Plugin for vCloud Director should now be ready to connect to the Avamar system with the updated credentials.

Rotation scenarios

This section describes the best practices for rotating VM, connection, and CST passwords.

Rotating the VM password

To change the VM password, you can either modify the `<hostname>.properties` file or use the `deployvm.sh` command. (See the last section in this appendix for detailed information about the `deployvm.sh` command.)

NOTE: The use of the vm.endingPw is only supported on the command line, as described in the following sections.

Changing the VM password during initial VM deployment

Enter the following command on one line:

`./deployvm.sh --vm.hostname=<hostname> --vm.type=vcpcell`
`--vm.endingPw=<new_password>`

NOTE: The first time you deploy the VM using the `deployvm.sh` command, you can provide the `vm.endingPW`. However, changes that are made after the initial deployment require the `-rotate.components` argument on the command line as shown below.

Changing the VM password after the VM has been deployed

Enter the following command on one line:

```
./deployvm.sh --vm.hostname=<hostname> --vm.type=vcpcell --rotate.components --
vm.endingPw=<new_password>
```

Rotating a connection password

Connection passwords can be rotated using two different processes. The first process replaces the existing credential password with a new password. For the second process, the system administrator creates an entirely new user credential having the existing user's equivalent authentication and authorization.

In either process, steps must be taken to avert the possibility of making an invalid connection while the passwords are being changed. The following sequence diagram illustrates a scenario where an invalid password connection can occur.

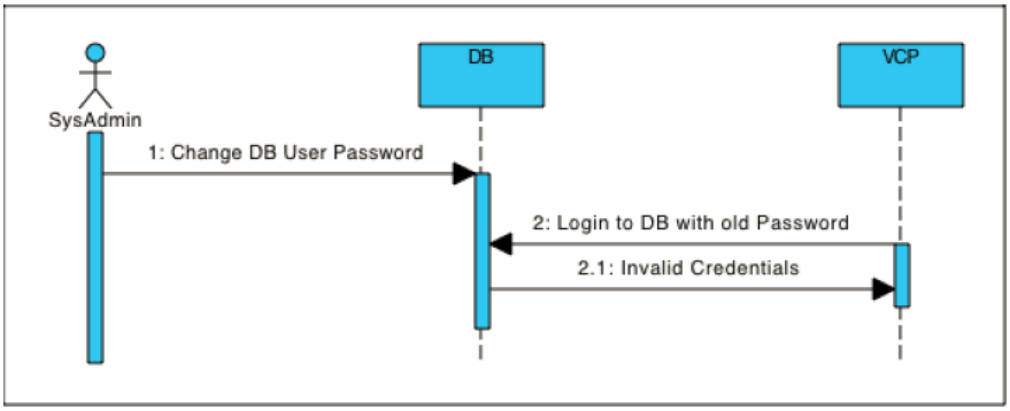

Figure 8. Interruption of service during credential change

In this example, the password issue arises when the database credential changes; however the credentials have not changed within the vCD Data Protection Extension component. When the vCD Data Protection Extension component attempts to log in, it cannot, because the credential information stored on the component is stale.

Process 1: Replacing the existing connection password

In this example, the database password for the VCP cell is being changed.

Prerequisites

Before performing this procedure, review deployvm.sh on page 84 for a detailed description of the `deployvm.sh` command.

About this task

The following figure illustrates a successful database password replacement.

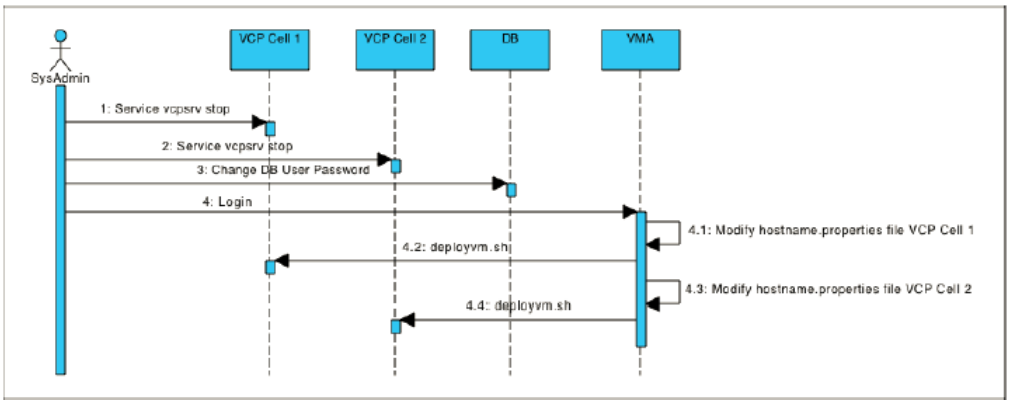

Figure 9. Successfully replacing a database password

When you replace the connection password, you must stop all VCP component's services before you make changes to both the database and the associated VCP cells.

NOTE: Executing the `deployvm.sh` command with the `--rotate.components` argument will, at the end of the script, automatically restart the specific vCD Data Protection Extension service.

Steps

1. Stop the VCP components that use the connection password.

   On the VCP cell VM, enter the following command:

   ```
   service vcpsrv stop
   ```

   NOTE: You must stop all VCP cells that are associated with this specific connection password.

2. Make the password change to the database.
3. Log in to the VMA VM and make the appropriate modification in the `<hostname>.properties` file. The modification must reflect the following:
   - The `<hostname>.properties` file must be equivalent to the VCP cell VM that was stopped.
   - Within the `<hostname>.properties` file, the `db.pword` key's value must be changed to be equivalent to the new database password.
4. Execute the `deployvm.sh` command with the appropriate values and the `--rotate.components` argument on the command line. (Enter the command on one line rather than on two as shown in the example).

   For example:

   ```
   ./deployvm.sh --vm.hostname=<hostname> --vm.type=vcpcell --rotate.components
   ```

   NOTE: Repeat step 3 and 4 for all components using this specific connection password.

Process 2: Creating a new equivalent credential connection password

In this example, the database password for the VCP cell is being changed by creating a new connection password with credentials that are equivalent to those of the existing user.

Prerequisites

Before performing this procedure, review deployvm.sh on page 84 for a detailed description of the `deployvm.sh` command.

About this task

The following figure illustrates this process.

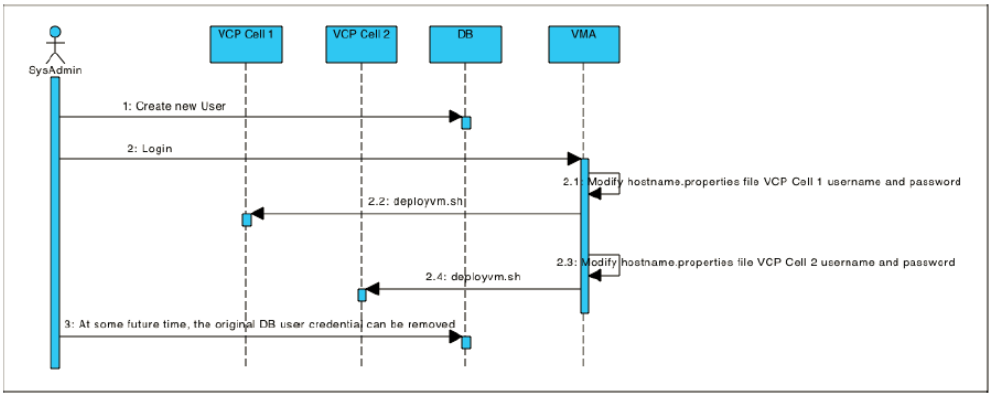

Figure 10. Creating a new equivalent user credential

In this example, a new database user is created with the exact configuration of the existing user first. None of the VCP components need to be stopped, and modification within the VMA is accomplished with minimal downtime of the VCP component. The additional step of removing the prior database user account is done only after all validation of the new database user within the VCP component has been tested.

Steps

1. Create a new database user credential with equivalent authentication and authorization of the existing user credential.
2. Login into the VMA VM and make the appropriate modification in the `<hostname>.properties` file.

   The modification must reflect the following:

   - The `<hostname>.properties` file must be equivalent to the VCP cell VM that was stopped.
   - Within the `<hostname>.properties` file, the `db.user` key's value must be changed to be equivalent to the new database user.
   - Within the `<hostname>.properties` file, the `db.pword` key's value must be changed to be equivalent to the new database password.
3. Execute the `deployvm.sh` command with the appropriate values and the `--rotate.components` argument on the command line. (Enter the command on one line rather than on two as shown in the example.)

   For example:

   ```
   ./deployvm.sh --vm.hostname=<hostname> --vm.type=vcpcell --rotate.components
   ```

   NOTE: Repeat steps 2 and 3 for all components using this same connection password.
4. Validate that the new credentials work properly on all required VCP cells.
5. Remove the old database credentials.

Scheduling password rotation

This topic describes best practices for scheduling the rotation of passwords on the VCP server, and on the Backup Gateway and Reporting servers.

Scheduling password rotation on the VCP server

On the VCP server, you can schedule the rotation of the VM, CST, and Connection passwords.

VM password

The changing of the VM Password can be scheduled at any time, since changing the VM password doesn't require any server/service or VM to be started.

CST password

The changing of the CST password can be scheduled at any time. Since changing the CST password invokes a restart of the service and the configuration of VCP Server Cells requires a minimum of two VCP Server Cells, each VCP Server's CST password can be changed independently.

NOTE: Do not change all VCP Server Cells' CST passwords simultaneously, because there is a possibility of service delay on pending requests. Make sure that you change the VCP server's CST passwords sequentially.

Connection password

The changing of the Connection password can be scheduled at any time, as long as the following best practices are followed:

- Process 2: Creating a new equivalent credential connection password on page 82 is used when rotating the Connection password for the VCP Server Cell.
- The rotations of the VCP Server Cells connection passwords are performed sequentially and not simultaneously.

Otherwise to ensure the message is not dropped or not processed, the VCP Server Cell's Connection password change must be scheduled during the Avamar maintenance window.

Scheduling password rotation on the Backup Gateway and Reporting servers

On the Backup Gateway and Reporting servers, you can schedule the rotation of the VM, CST, and Connection passwords.

VM password

The changing of the VM Password can be scheduled at any time, since the changing of the VM password doesn't require any server or VM to be started.

CST and Connection passwords

Due to the single-server configuration of the Backup Gateway and Reporting servers, there is a small window of time during which content or messages can be dropped or not processed by either server. This can happen when either of the services need to be restarted when changing the CST or Connection passwords.

NOTE: To ensure that the message is not dropped or not processed, you must schedule the changing of the CST or Connection password during the Avamar maintenance window.

deployvm.sh

The `deployvm.sh` command deploys and manages the vCloud Protector Component VM.

Description

NOTE:

- CST Administration functionality (change CST password, reset CST lockbox, etc) can be provided via a command line argument using deployvm.sh.
- Command line arguments no longer have the highest precedence. The `<hostname>.properties` file now has the highest precedence.
- VM password changing is preformed on via the deployvm.sh command line. Changing the VM password is no longer supported via the `<hostname>.properties` file.

The `deployvm.sh` command's primary purpose is to deploy a virtual machine within VMware VCenter. The `deployvm.sh` command creates a vCloud Protector component VM.

The command's secondary purpose is to modify values that were used to configure the VM. In the primary purpose scenario, the type of vCloud Protector Component is provided by the `--vm.type` argument. In the secondary purpose scenario, changes and modification require the `--rotate.components` argument.

The command's tertiary purpose is used in either the primary or secondary scenarios. In the tertiary purpose scenario, the password of the VM is being changed; this can occur in either the primary or secondary scenarios.

Syntax

```
./deployvm.sh [Help display] {Primary Required Options} [Secondary Options] [Tertiary
Option]
```

[Help Display]

-h

Displays usage screen; all other arguments should be disregarded.

--help

Long form to display usage screen; all other arguments should be disregarded.

{Primary Required Options}

The primary options, which are required, are needed for all options (primary, secondary and tertiary}. Executing the `deployvm.sh` command using only the primary options creates the VM.

--vm.hostname=<hostname.domain.com>

Specify the hostname of the VM to be deployed (mandatory). Note that `<hostname.domain.com>` should be substituted for the FQDN in your DNS. In addition, an `FQDN.properties` file should be provided within the same directory where the command is executed. Finally, the `FQDN.properties` file provides specific configuration information used to deploy the `<hostname.domain.com>` VM.

--vm.type=<Known vCloud Protector Components>

Specify the type of VM to be deployed (mandatory). Note that gateway|vcpcell|vcprpt|vcpui are currently the known VM types.

[Secondary Options]

The secondary options are needed to modify key/value pairs (for example, component credential, database password, etc). The primary options must both be provided when using the secondary options.

--rotate.components

Specify that within one of the properties files (`default.properties` or `<hostname>.properties`, a key/value pair has been modified. Execution of the `deployvm.sh` command with both the primary and secondary options will modify the VM's configuration and restart the service.

--vm.cstChangePw=<NewCSTPassword>

Specify what the VM CST's password should be. The `--rotate.components` argument must also be provided. The <NewCSTPassword> must be substituted for the updated CST password.

Note the following:

- The current `vm.cstpword` key/value pair must be provided in the `hostname.properties` file.
- The <NewCSTPassword> must comply with CST Password requirements, which specify that the password must be a minimum 8 characters, and contain at least one upper-case letter, one lower-case letter, one number, and one special character. Further, because the CST password can contain special characters (i.e., **`!@#%&*_-=+|~`**) care must be taken; some special characters (for example

|, **!**, **=** and others) have special uses in the shell script and therefore must be escaped using **** (for example, **\|** or **\=**).

[Tertiary Option]

The tertiary option is needed to modify key/value pairs (for example, component credential, database password, etc), but it can also be used during the initialization of the VM.

NOTE: The primary options must both be provided when using the tertiary option.

--vm.endingPw=<TheNewVMPassword>

In the VM creation scenario, this option specifies the ending password of the VM. In the existing VM scenario (`--rotate.components`) this option will change the password of the VM.

If you are instantiating the VM, the `-rotate.components` argument is not required. However, if the VM has already been created, the `-rotate.components` argument is required. The <TheNewVMPassword> must be substituted for the updated VM password.

E

Monitoring vCD Data Protection Extension Components

This appendix includes the following topics:

Topics:

- Introduction
- Setting up monitoring on the backup gateway
- Turning off monitoring on the backup gateway
- Setting up monitoring on the vCloud Protector cell
- Turning off monitoring on the vCloud Protector cell
- Setting up a remote JMX client for monitoring
- Backup gateway health monitoring
- vCloud Protector health monitoring
- Other JMX clients
- Troubleshooting

Introduction

The vCD Data Protection Extension now provides the ability to monitor system health, and to verify system availability and connectivity. The monitoring system provides information on overall system health and connectivity with external components with which Backup Gateway and vCloud Protector cells communicate.

The technology used for building the monitoring system is Java Management Extension (JMX), which allows remote JMX clients to connect to a Java process and to monitor applications running inside the process.

The resources being monitored are exposed as Mbeans with attributes representing the state of the resource.

In this appendix, JConsole is used as the JMX client for monitoring the system. See Other JMX clients on page 92 for a list of other JMX clients that can be used.

Setting up monitoring on the backup gateway

This section describes the necessary configuration for setting up monitoring for the backup gateway. Note that monitoring is enabled by default.

About this task

Two java processes run on the backup gateway. Verify that monitoring is enabled for both processes. You can also change the default ports that JMX is configured at for each application.

The following procedure describes how to verify and, optionally, to change the configuration of JMX ports for each application.

Steps

1. For the BG-ADS application, do the following:
   a. In the VMA used for deploying the backup gateway, open the `gateway.example.com` file that was used to deploy the backup gateway. Look for the `gateway.port.jmx_port_1` setting.

      If the setting is not present, monitoring is enabled for BG-ADS. These are the default port settings:
      - JMX Port : 7010 – The JMX port at which BG-ADS exposes its MBeans.
      - JMX Data Port : 7011 – The JMX Data port that BG-ADS uses internally for JMX data transfer.

   b. To change the default port, specify the following property in the properties file:

- JMX Port: `gateway.port.jmx_port_1=<desired JMX port>`
- JMX Data Port: `gateway.port.jmx_rmi_port_1=<another free port>`

2. For the BG-Plugin application, do the following:
   a. In the VMA used for deploying the backup gateway, open the `gateway.example.com` file that was used to deploy the backup gateway. Look for `gateway.port.jmx_port_2` setting.

      If it is not present, monitoring is enabled for BG-Plugin. These are the default port settings:
      - JMX Port : 7020 – The JMX port at which BG-Plugin exposes its MBeans.
      - JMX Data Port : 7021 – The JMX Data port that BG-Plugin uses internally for JMX data transfer.

   b. To change the default port, specify the following property in the properties file:
      - JMX Port: `gateway.port.jmx_port_2=<desired JMX port>`
      - JMX Data Port: `gateway.port.jmx_rmi_port_2=<another free port>`
3. If you changed the default ports (described in steps 1.b and 2.b) after the install, run the following command on the VMA to update the configuration in the deployed backup gateway:

   `deployvm.sh --vm.hostname=<FQDN> -update`

Turning off monitoring on the backup gateway

This section describes how to turn off monitoring on the backup gateway.

Steps

1. For the BG-ADS application, in the VMA used for deploying the backup gateway, add or update the values of the JMX Port and JMX Data Port as follows:
   - JMX Port: `gateway.port.jmx_port_1=-1`
   - JMX Data Port: `gateway.port.jmx_rmi_port_1=-1`
2. For the BG-Plugin application, in the VMA used for deploying the backup gateway, add or update the value of the JMX Port and JMX Data Port as follows:
   - JMX Port: `gateway.port.jmx_port_2=-1`
   - JMX Data Port: `gateway.port.jmx_rmi_port_2=-1`
3. If you perform steps 1 or 2 after an install, run the following command on the VMA to update the configuration in the deployed backup gateway:

   `deployvm.sh --vm.hostname=<BackupGateway-FQDN> -update`

Setting up monitoring on the vCloud Protector cell

This section describes the necessary configuration for setting up component monitoring for the vCloud Protector cell. Note that monitoring is enabled by default.

About this task

Verify that monitoring is enabled for the vCloud Protector cell. You can also change the default ports that JMX is configured at for each application.

The following procedure describes how to verify and, optionally, change the configuration of JMX ports for the vCloud Protector cell.

Steps

1. In the VMA used for deploying the vCloud Protector cell, open the `vcpcell.example.com` file that was used to deploy the vCloud Protector cell. Look for `vcpcell.port.jmx_port_1` setting.

   If it is not present, monitoring is enabled for the vCloud Protector cell. These are the default port settings:
   - JMX Port: 7010 – The JMX port at which vCloud Protector cell exposes its MBeans.
   - JMX Data Port: 7011 – The JMX Data port that vCloud Protector cell uses internally for JMX data transfer.
2. To change the default port, specify the following property in the properties file:
   - JMX Port: `vcpcell.port.jmx_port_1=<desired JMX port>`

- JMX Data Port: `vcpcell.port.jmx_rmi_port_1=<another free port>`

3. If any of the ports have been updated as described in step 2 after the install, run the following command on the VMA to update the configuration in the deployed backup gateway:

   `deployvm.sh --vm.hostname=<FQDN> -update`

Turning off monitoring on the vCloud Protector cell

This section describes how to turn off monitoring on the vCloud Protector cell.

Steps

1. In the VMA used for deploying the vCloud Protector cell, add or update the values of JMX Port and JMX Data Port as follows:
   - JMX Port: `vcpcell.port.jmx_port_1=-1`
   - JMX Data Port: `vcpcell.port.jmx_rmi_port_1=-1`
2. If you perform step 1 after an install, run the following command on the VMA to update the configuration in the deployed vCloud Protector cell:

   `deployvm.sh --vm.hostname=<VCP-FQDN> -update`

Setting up a remote JMX client for monitoring

This section describes how to set up the JMX client VM for remotely monitoring the backup gateway or the vCloud Protector cell.

Steps

1. Configure a VM to monitor the component, hereafter called “JMX client VM.”
2. Ensure that JMX client VM must have network connectivity to the VM of the component being monitored - backup gateway and/or vCloud Protector cell.
3. Install Java Development Kit (JDK) v7 on the JMX client. JConsole is packaged as part of the JDK.
4. Export the public certificate of the component being monitored (backup gateway or vCloud Protector cell) and copy the certificate to the JMX client VM.
   - To export the public certificate of the backup gateway:
     a. On the CPSH VM that was used to deploy the backup gateway, run the following command to export the public certificate of backup gateway:

        `keytool -export -alias tomcat -keystore <BackupGatewayFQDN>.truststore -file gateway.example.com.crt`

        Alternatively, you can log in to the backup gateway VM, navigate to the folder containing the truststore (`/etc/vcp`) and run the following command to export the public certificate :

        `keytool -export -alias tomcat -keystore truststore -file gateway.example.com.crt`

     b. Copy the `gateway.example.com.crt` public certificate file to the JMX client VM.
   - To export the public certificate of the vCloud Protector cell:
     a. On the CPSH VM that was used to deploy the vCloud Protector cell, run the following command to export the public certificate of vCloud Protector cell:

        `keytool -export -alias tomcat -keystore <vcpcell.example.com>.truststore -file vcpcell.example.com.crt`

        Alternatively, you can log in to the vCloud Protector VM, navigate to the folder containing the truststore (`/etc/vcp`) and run the following command to export the public certificate:

        `keytool -export -alias tomcat -keystore truststore -file vcpcell.example.com.crt`

     b. Copy the `vcpcell.example.com.crt` public certificate file to the JMX client VM.
5. On the JMX client VM, enter the following command to create a truststore and to import the public certificate from step 4 into the truststore:

```
keytool -import -alias "example-component" -file <example-certificate> -keystore
<example-truststore>
```

6. Enter the following command to launch JConsole, using the truststore built in step 5:

```
jconsole -J-Djavax.net.ssl.trustStore=<example-truststore> -J-
Djavax.net.ssl.trustStorePassword=<example-truststore-password> <FQDN:Port>
```

   where:

   - FQDN is the fully qualified domain name of the component being monitored (backup gateway or vCloud Protector cell).
   - Port: JMX Port of the application being monitored – This is the port that was used to deploy the component in the backup gateway or vCloud Protector cell). Depending on the application being monitored, the following ports can be used:
     - Backup gateway – Port for either BG-ADS application or BG-Plugin application. See Setting up monitoring on the backup gateway on page 87.
     - vCloud Protector – Port for vCloud Protector. See Setting up monitoring on the vCloud Protector cell on page 88.

Backup gateway health monitoring

The backup gateway has two separate independent Java applications:

- Backup gateway – ADS: Responsible for processing Requests from VCP.
- Backup gateway – Plugin: Responsible for communicating with vApp proxy.

The JMX client can be connected to the backup gateway ADS or plugin applications to monitor the heath of the particular application.

Each application exposes its MBeans for monitoring at separate ports configured during deployment. JMX clients connect to the two ports defined above (ADS-JMX Port or Plugin-JMX Port) to view resource health for that application.

Monitored resources have the following attributes:

- Status: Health Status represented as one of:
  - Uninitialized
  - Running
  - Failed
- Last Poll Time: Represents the last sampling time—the last time the status was updated.

The application resources described in the following sections are currently monitored.

Connectivity to Avamar

The backup gateway communicates with an Avamar system for its operations. The health of Avamar connectivity is shown as one of the following possible states:

- Running: The backup gateway can successfully connect to the Avamar system.
- Failed: The backup gateway cannot connect to the Avamar system.

Connectivity fo the cloud

The backup gateway communicates with one or more vCloud Director servers. The health of cloud connectivity is represented as one of the following states:

- Uninitialized:
  - Expected at server startup.
  - Also indicates a state when the backup gateway has not received any request from VCP, nor processed any scheduled jobs since server startup.
- Running: All cloud sessions that this backup gateway is currently maintaining are in a healthy state.
- Failed: One or more of the cloud sessions are in a Failed state.

Connectivity to the vCenter

The backup gateway communicates with one or more vCenters. The health of vCenter connectivity is represented as one of the following states:

- Uninitialized:
  - Expected at server startup.
  - Also indicates a state when the backup gateway has not processed any requests/jobs that require it to communicate with a vCenter since server startup.
- Running: All vCenter connections that this backup gateway is currently maintaining are in a healthy state.
- Failed: One or more of the vCenter sessions are in a Failed state.

vCloud Protector health monitoring

Unlike the backup gateway, the vCloud Protector is a single Java application.

The vCloud Protector exposes its MBeans for monitoring at a port configured during deployment. JMX clients connect to the two ports defined above (VCP-JMX Port) to view the resource health for that application.

Monitored resources have the following attributes:

- Status: Health status represented as one of:
  - Uninitialized
  - Running
  - Failed
- Last Poll Time: Represents the last sampling time—the last time the status was updated.

The application resources described in the following sections are currently monitored.

Connectivity to the database

vCloud Protector communicates with an internal Postgres database. The health of this database connectivity is shown as one of the following states:

- Uninitialized: The vCloud Protector Cell is probably starting up. Connectivity to the database has not been established.
- Running: The vCloud Protector cell can successfully connect to the database.
- Failed: The vCloud Protector cell cannot connect to the database.

Connectivity to the cloud

vCloud Protector cell receives requests from and communicates with the vCloud director. The health of this cloud connectivity is represented as one of the following states:

- Uninitialized: The vCloud Protector cell is probably starting up. Connectivity to the cloud has not been established.
- Running: The vCloud Protector cell can successfully connect to the cloud.
- Failed: The vCloud Protector cell cannot connect to the cloud.

Connectivity to RabbitMQ

vCloud Protector Cell receives job requests from and communicates with a RabbitMQ server.

The health of the RabbitMQ server connectivity is represented as one of the following states:

- Uninitialized: The vCloud Protector Cell is probably starting up. Connectivity to the RabbitMQ server has not been established.
- Running: The vCloud Protector cell can successfully connect to the RabbitMQ server.
- Failed: The vCloud Protector cell cannot connect to the RabbitMQ server.

Other JMX clients

There are other JMX clients that can be used to monitor the system:

- JMXConsoleTools, VisualVM (Free/OpenSource)
- Hyperic HQ (Community edition, enterprise edition)
- Zenoss (Limited OpenSource edition, commercial edition)

Operations personnel create alerts and notifications in the remote JMX client, based on reading MBean attributes. This is done on a polling basis where the frequency is set by the external monitoring system.

- Example 1, vCloud Protector cell monitoring: once a minute, obtain vCP server's database connection status. If it is down, send an alert.
- Example 2, backup gateway monitoring: once a minute, obtain the ADS application's Avamar connection status. If it is down, send an alert.

Troubleshooting

If JConsole or the JMX client cannot connect to any component, do the following:

- Verify that JMX is turned on for that particular Aries component (for example, vCloud Protector cell or backup gateway). In the VMA used for deploying the component, open the `<example-component>.properties` file and note the value specified for the JMX port specified for that application – component is not -1.
  - For the backup gateway ADS, look for *<gateway.jmx_port_1>*.
  - For the backup gateway plugin, look for *<gateway.jmx_port_2>*. If not specified in the file, the system uses a default value of 7020 (see Setting up monitoring on the backup gateway on page 87).
  - For the vCloud Protector cell, look for *<vcpcell.jmx_port_1>* . If not specified in the file, the system uses a default value of 7010 (see Setting up monitoring on the vCloud Protector cell on page 88).
- Verify that Jconsole is connecting to the right port.
- Verify that the signature on the public certificate in the JMX client truststore matches the one on the private key on the component.
- Verify that the truststore is provided in the path when JConsole is launched.

F

Port Usage

Topics:

- Port usage summary

Port usage summary

The following table provides a summary of the ports that are used by the vCD Data Protection Extension.

Table 29. Network connection and port usage summary

Initiator	Target	Protocol	Port	Notes
vCloud Protector cell(s)	vCloud Director	TCP(https)	443	vCloud REST API
vCloud Protector cell(s)	RabbitMQ server	AMQP(TLS)	5671[a]	Message Queue
vCloud Protector cell(s)	vCloud Protector PostgreSQL database server	TCP	5432	SSL encrypted
EMC Backup Gateway	vCenter(s)	TCP (https)	443	vSphere SOAP API
EMC Backup Gateway	vCloud Director	TCP (https)	443	vCloud REST API
EMC Backup Gateway	RabbitMQ server	AMQP(TLS)	5671[b]	Message Queue
EMC Backup Gateway	AVE	TCP(https)	9443	EMC Avamar management WS
VM Image Proxy(s)	vCenter	UDP	902	vSphere SOAP API, VDDK communication
VM Image Proxy(s)	ESXi host(s)	TCP	902	Host access for provisioning
Avamar Backup Appliance	vCenter	TCP (https)	443	Vmfs datastore browse. Upload and download
Avamar Backup Appliance	Data Domain Backup Appliance (optional)	TCP(NFS)	2049	nfsd
Avamar Backup Appliance	Data Domain Backup Appliance (optional)	TCP(NFS)	2052	mountd
Avamar Backup Appliance	Data Domain Backup Appliance (optional)	TCP(NFS)	111	portmapper
Avamar Backup Appliance	Data Domain Backup Appliance (optional)	TCP(NFS)	111	portmapper
Avamar Backup Appliance	Data Domain Backup Appliance (optional)	ICMP(ping)	7	
Avamar Backup Appliance	Data Domain Backup Appliance (optional)	UDP	161	SNMP
VM Image Proxy(s)	vCenter	TCP (https)	443	Vmfs datastore browse. Upload and download
VM Image Proxy(s)	Avamar Virtual Appliance	TCP	28001	EMC Avamar management protocol

Table 29. Network connection and port usage summary (continued)

Initiator	Target	Protocol	Port	Notes
EMC Backup Gateway	Avamar Virtual Appliance	TCP	28001	EMC Avamar management protocol
Avamar Backup Appliance	VM Image Proxy(s)	TCP	28002-28033	EMC Avamar management protocol
VM Image Proxy(s)	Avamar Virtual Appliance	TCP	27000, 29000	EMC Avamar storage protocol
Avamar Backup Gateway	Avamar Virtual Appliance	TCP	27000, 29000	EMC Avamar storage protocol
VM Image Proxy(s)	Data Domain Appliance	TCP	111	DDBoost-NFS protocol: RPC portmapper
VM Image Proxy(s)	Data Domain Appliance	TCP	2049	DDBoost, NFS protocol
VM Image Proxy(s)	Data Domain Appliance	TCP	2052[c]	DDBoost, NFS protocol; mountd
Newly deployed EMC Backup Gateway & vCloud Protector cells	EMC VPA	TCP(https)	8140	Puppet API
Newly deployed EMC Backup Gateway & vCloud Protector cells	EMC VPA	TCP(https)	80	Yum repository
vCloud Protector cell(s)	vCloud Director	TCP(https)	443	vCloud REST API
vCloud Protector cell(s)	EMC Gateway	TCP(https)	8443	Control path between cell and gateway
CPSH	vCenter(s)	TCP(https)	443	vSphere SOAP API
Reporting Server	Not applicable	TCP (http)	9783	Tomcat manager for administration
Reporting Server	Not applicable	TCP (http)	9446	Tomcat manager for administration
Reporting Server	RabbitMQ server	AMQP(TLS)	5672	Message Queue
Reporting Postgres database server	vCloud Protector PostgreSQL database server	TCP	5432	SSL encrypted

a. vSphere SOAP API, VDDK communication
b. vSphere SOAP API, VDDK communication
c. vSphere SOAP API, VDDK communication

Glossary

A

administrator
Person who normally installs, configures, and maintains software on network computers, and who adds users and defines user privileges.

Avamar server
The server component of the Avamar client/server system. Avamar server is a fault-tolerant, high-availability system that efficiently stores the backups from all protected clients. It also provides essential processes and services required for data restores, client access, and remote system administration. Avamar server runs as a distributed application across multiple networked storage nodes.

B

backup
A point-in-time copy of client data that can be restored as individual files, selected data, or as an entire backup.

backup appliance
Represents an Avamar backup store, and maps a physical or virtual Avamar store to your cloud resources through a backup gateway server. It also associates one or more vCenter instances from your cloud to Avamar so that you can perform backup, restore, and replication operations.

backup policy template
A combination of a backup schedule, a retention period, and an option set. To create a backup policy template, you must first create at least one schedule, one retention period, and one option set.

backup repository
Associates a backup store with the Org vDCs in an organization. After you register an organization with the vCloud Director Data Protection Extension , you can add backup repositories to the vDCs within the organization. Backup repositories are required for performing backups and restores.

browse
The process of viewing data that is available for backup on a client computer or restore from the Avamar server.

D

DNS
Domain Name Server. A dynamic and distributed directory service for assigning domain names to specific IP addresses.

M

MCS
Management console server. The server subsystem that provides centralized administration (scheduling, monitoring, and management) for the Avamar server. The MCS also runs the server-side processes used by *Avamar Administrator*.

O

option set
A collection of Avamar plug-in options that will be invoked during the backup process. By default, you should create an option set named "No Options" that contains no flags or values. Do not specify any flags unless instructed to do so by Customer Support.

P

plug-in
Avamar client software that recognizes a particular kind of data resident on that client.

plug-in options
Options that you specify during backup or restore to control backup or restore functionality.

policy
A set of rules for client backups that can be named and applied to multiple groups. Groups have dataset, schedule, and retention policies.

R

restore
An operation that retrieves one or more file systems, directories, files, or data objects from a backup and writes the data to a designated location.

restore-only repository
Used only for restores, never for backups. A restore-only repository is required when you want to restore a vApp to a different Org VDC, a vApp that was installed on an Org VDC that has been deleted from vCloud Director, or a vApp backup that was replicated by Avamar.

retention
The time setting to automatically delete backups on an Avamar server. Retention can be set to permanent for backups that should not be deleted from an Avamar server. Retention is a persistent and reusable Avamar policy that can be named and attached to multiple groups.

S

schedule
The ability to control the frequency and the start and end time each day for backups of clients in a group. A schedule is a persistent and reusable Avamar policy that can be named and attached to multiple groups.

V

virtual machine (VM)
A computer that is a software implementation of a computer. Virtual machines are used to run different operating systems at the same time on one physical computer. Each operating system runs in its own isolated execution environment.