Dell EMC VxFlex Ready Node 13G

Hardware Installation Guide

302-002-955
REV 05

DELL EMC

Copyright © 2016-2018 Dell Inc. or its subsidiaries. All rights reserved.

Published June 2018

Dell believes the information in this publication is accurate as of its publication date. The information is subject to change without notice.

THE INFORMATION IN THIS PUBLICATION IS PROVIDED "AS-IS." DELL MAKES NO REPRESENTATIONS OR WARRANTIES OF ANY KIND WITH RESPECT TO THE INFORMATION IN THIS PUBLICATION, AND SPECIFICALLY DISCLAIMS IMPLIED WARRANTIES OF MERCHANTABILITY OR FITNESS FOR A PARTICULAR PURPOSE. USE, COPYING, AND DISTRIBUTION OF ANY DELL SOFTWARE DESCRIBED IN THIS PUBLICATION REQUIRES AN APPLICABLE SOFTWARE LICENSE.

Dell, EMC, and other trademarks are trademarks of Dell Inc. or its subsidiaries. Other trademarks may be the property of their respective owners. Published in the USA.

Dell EMC
Hopkinton, Massachusetts 01748-9103
1-508-435-1000 In North America 1-866-464-7381
www.DellEMC.com

CONTENTS

Figures 5

Tables 7

Preface 9

Chapter 1 Before You Begin 11
Conventions used in this document 12
Where to get help 12
Site requirements 13
Hardware acclimation times 13

Part 1 1U1N Procedures 15

Chapter 2 1U1N Configuration Equipment Installation 17
Installation of the equipment in the cabinet 18
Installation in cabinets with single-phase power distribution 18
Installation in cabinets with 3-phase delta power distribution 21
Installation in cabinets with 3-phase wye power distribution 25
Cabinet rail kits 29
Determine rail kit that will be used 31
Install the static rail assemblies in the cabinet 31
Install the static chassis rails on the server 32
Install the server in the cabinet 33
Install the sliding rail assemblies 34
Install the server on sliding rail assemblies 35
Routing the cables 37
Install bezel 37

Chapter 3 Install AC Power Cables 39
Guidelines for installing and connecting AC power cables 40
Sample single-phase wiring for 1U1N configuration 41

Chapter 4 Install management network I/O cables 45
Guidelines for installing and connecting management network cables 46
Management network A, nodes 1 - 16 cabling 46
Management network A, nodes 17 - 22 cabling 48
Management network B, nodes 23 - 32 cabling 49

Chapter 5 Install data network I/O cables 51
Data network A, nodes 1 - 22 cabling example 52
Data network B, nodes 1 - 22 cabling example 53

Chapter 6 **Update the Install Database** **55**
Update the install database 56

Part 2 **2U1N Procedures** **57**

Chapter 7 **2U1N Configuration Equipment Installation** **59**
Installation of the equipment in the cabinet 60
2U1N configuration installation guidelines 60
Cabinet rail kits 61
Determine rail kit that will be used 63
Install the static rail assemblies in the cabinet 63
Install the static chassis rails on the server 64
Install the server in the cabinet 64
Install the sliding rail assemblies 65
Install the server on sliding rail assemblies 66
Routing the cables 68
Install bezel 68

Chapter 8 **Wiring Diagrams for a 2U1N Configuration** **71**
Guidelines for wiring a 2U1N configuration 72
Sample single-phase wiring for 2U1N configuration 73
Management network wiring for 2U1N configuration 76
Data network A wiring for 2U1N configuration 78
Data network B wiring for 2U1N configuration 80

Chapter 9 **Update the Install Database** **81**
Update the install database 82

FIGURES

1 Cabinet stack up for a minimum configuration.... 19
2 Cabinet stack up for a maximum configuration....21
3 Cabinet stack up for a minimum configuration....23
4 Cabinet stack up for a maximum configuration....25
5 Cabinet stack up for a minimum configuration....27
6 Cabinet stack up for a maximum configuration....29
7 Static rail kit.... 30
8 Sliding rail kit....31
9 Installing static rail assemblies.... 32
10 Installing static chassis rails.... 33
11 Install the server 34
12 Installing sliding rail assemblies.... 35
13 Install server on sliding rail assemblies.... 36
14 Secure the server in the cabinet.... 36
15 Hook and loop straps.... 37
16 Install the bezel.... 38
17 Connectors on rear panel of servers and switches....40
18 Single-phase power distribution.... 41
19 Console and management ports on switches.... 46
20 Management A, nodes 1 - 16 cabling example.... 47
21 Data networks A and B cabling example.... 52
22 Cabinet stack up for 2U1N configurations.... 61
23 Static rail kit.... 62
24 Sliding rail kit.... 62
25 Installing static rail assemblies.... 63
26 Installing static chassis rails.... 64
27 Install the server 65
28 Installing sliding rail assemblies.... 66
29 Install server on sliding rail assemblies.... 67
30 Secure the server in the cabinet.... 67
31 Hook and loop straps.... 68
32 Install the bezel.... 69
33 Power connectors on rear panel of servers and switches.... 72
34 Single-phase power distribution....74
35 Management network 76
36 Data networks A and B.... 79

TABLES

1 Site requirements....13
2 Hardware acclimation times (systems and components)....13
3 Minimum configuration in single-phase power distribution cabinets....18
4 Maximum configuration in single-phase power distribution cabinets....19
5 Minimum configuration in 3-phase delta power distribution cabinets....22
6 Stack up for a maximum configuration....23
7 Minimum configuration in 3-phase wye power distribution cabinets....26
8 Maximum configuration in 3-phase wye power distribution cabinets....27
9 Single-phase power distribution cabling (from top to bottom)....41
10 Management A, nodes 1 -16 cabling....47
11 Management A, nodes 17 - 22 cabling....49
12 Management B, nodes 23 -32 cabling....49
13 Data A, nodes 1 - 22 cabling....52
14 Data B, nodes 1 - 22 cabling....53
15 Stack up for a minimum configuration....60
16 Stack up for a maximum configuration....60
17 Single-phase power distribution cabling....74
18 Management network cabling....77
19 Data network A cabling....79
20 Data network B cabling....80

Preface

As part of an effort to improve its product lines, Dell EMC periodically releases revisions of its software and hardware. Therefore, some functions described in this document might not be supported by all versions of the software or hardware currently in use. The product release notes provide the most up-to-date information on product features.

Contact your Dell EMC technical support professional if a product does not function properly or does not function as described in this document.

Note

This document was accurate at publication time. Go to Dell EMC Online Support (https://support.emc.com) to ensure that you are using the latest version of this document.

Previous versions of Dell EMC VxFlex OS were marketed under the name Dell EMC ScaleIO.

Similarly, previous versions of Dell EMC VxFlex Ready Node were marketed under the name Dell EMC ScaleIO Ready Node.

References to the old names in the product, documentation, or software, etc. will change over time.

Note

Software and technical aspects apply equally, regardless of the branding of the product.

Related documentation

The release notes for your version includes the latest information for your product.

The following Dell EMC publication sets provide information about your VxFlex OS or VxFlex Ready Node product:

- VxFlex OS software (downloadable as VxFlex OS Software <version> Documentation set)
- VxFlex Ready Node with AMS (downloadable as VxFlex Ready Node with AMS Documentation set)
- VxFlex Ready Node no AMS (downloadable as VxFlex Ready Node no AMS Documentation set)
- VxRack Node 100 Series (downloadable as VxRack Node 100 Series Documentation set)

You can download the release notes, the document sets, and other related documentation from Dell EMC Online Support.

Typographical conventions

Dell EMC uses the following type style conventions in this document:

Bold	Used for names of interface elements, such as names of windows, dialog boxes, buttons, fields, tab names, key names, and menu paths (what the user specifically selects or clicks)

Italic	Used for full titles of publications referenced in text
`Monospace`	Used for: • System code • System output, such as an error message or script • Pathnames, filenames, prompts, and syntax • Commands and options
Monospace italic	Used for variables
`Monospace bold`	Used for user input
[ ]	Square brackets enclose optional values
|	Vertical bar indicates alternate selections - the bar means “or”
{ }	Braces enclose content that the user must specify, such as x or y or z
...	Ellipses indicate nonessential information omitted from the example

Where to get help

Dell EMC support, product, and licensing information can be obtained as follows:

Product information

For documentation, release notes, software updates, or information about Dell EMC products, go to Dell EMC Online Support at https://support.emc.com.

Technical support

Go to Dell EMC Online Support and click Service Center. You will see several options for contacting Dell EMC Technical Support. Note that to open a service request, you must have a valid support agreement. Contact your Dell EMC sales representative for details about obtaining a valid support agreement or with questions about your account.

Your comments

Your suggestions will help us continue to improve the accuracy, organization, and overall quality of the user publications. Send your opinions of this document to techpubcomments@emc.com.

CHAPTER 1

Before You Begin

This chapter provides information to obtain assistance and to prepare for the installation.

Topics include:

- Conventions used in this document 12
- Where to get help 12
- Site requirements 13
- Hardware acclimation times 13

Conventions used in this document

Dell EMC uses the following conventions for special notices:

DANGER

DANGER indicates a hazardous situation which, if not avoided, will result in death or serious injury.

WARNING

WARNING indicates a hazardous situation which, if not avoided, could result in death or serious injury.

CAUTION

CAUTION, used with the safety alert symbol, indicates a hazardous situation which, if not avoided, could result in minor or moderate injury.

NOTICE

NOTICE is used to address practices not related to personal injury.

Note

A note presents information that is important, but not hazard-related.

Where to get help

Dell EMC technical support, documentation, release notes, software updates, or information about Dell EMC products can be obtained on the Dell EMC Online Support site https://support.emc.com(registration required).

Note

To open a service request through the Dell EMC Online Support site, you must have a valid support agreement. Contact your Dell EMC sales representative for details about obtaining a valid support agreement or to answer any questions about your account.

The Support by Product web pages offer quick links to Documentation, White Papers, Advisories (such as frequently used Knowledgebase articles), and Downloads, as well as more dynamic content, such as presentations, discussions, relevant Customer Support Forum entries, and a link to Dell EMC Live Chat.

Dell EMC Live Chat — Open a Chat or instant message session with a Dell EMC Support Engineer.

Site requirements

Confirm that the customer site meets all requirements before you begin the installation.

The following table describes site requirements and provides references to additional information.

Table 1 Site requirements

Requirement	Description
Computer room	The system requires a properly equipped computer room with controlled temperature and humidity, proper airflow and ventilation, proper power and grounding, system cable routing facilities, and fire equipment.
Power	The system is fed power from two independent power sources, zone A and zone B. To assure fault tolerant power, customer-supplied AC power must be connected to independent power distribution units (PDUs).
System acclimation	The system must be acclimated to the new environment before hardware is installed. To acclimate the system, place the unpacked system bays in the new operating environment. Open the front and the rear door of each bay and let the system stabilize up to four hours in dry conditions and up to sixteen hours in hot and humid conditions. Do not apply AC power until the system is acclimated to the local environment.
Customer installed cables	Dispersed system bays include longer switch and Ethernet cable bundles that extend the separation distance between system bay 1 and one or more dispersed system bays. Cable bundles for dispersed system bays may be routed across the subfloor or in the overhead ceiling space. If you are not allowed access under the floor or to the ceiling routing space, ensure that the customer has installed the cable bundles under the correct floor or ceiling tiles, and has retained the protective packaging on the cable connectors.

Hardware acclimation times

Systems and components must acclimate to the operating environment before applying power. This requires the unpackaged system or component to reside in the operating environment for up to 16 hours in order to thermally stabilize and prevent condensation.

Table 2 Hardware acclimation times (systems and components)

If the last 24 hours of the TRANSIT/STORAGE environment was this:		**...and the OPERATING environment is this:**	**...then let the system or component acclimate in the new environment this many hours:**
Temperature	Humidity		
Nominal	Nominal	Nominal 68-72°F (20-22°C)	0-1 hour

Table 2 Hardware acclimation times (systems and components) (continued)

If the last 24 hours of the TRANSIT/STORAGE environment was this:		**...and the OPERATING environment is this:**	**...then let the system or component acclimate in the new environment this many hours:**
68-72°F (20-22°C)	40-55% RH	40-55% RH	
Cold <68°F (20°C)	Dry <30% RH	<86°F (30°C)	4 hours
Cold <68°F (20°C)	Damp ≥30% RH	<86°F (30°C)	4 hours
Hot >72°F (22°C)	Dry <30% RH	<86°F (30°C)	4 hours
Hot >72°F (22°C)	Humid 30-45% RH	<86°F (30°C)	4 hours
	Humid 45-60% RH	<86°F (30°C)	8 hours
	Humid ≥60% RH	<86°F (30°C)	16 hours
Unknown		<86°F (30°C)	16 hours

NOTICE

- If there are signs of condensation after the recommended acclimation time has passed, allow an additional eight (8) hours to stabilize.
- Systems and components must not experience changes in temperature and humidity that are likely to cause condensation to form on or in that system or component. Do not exceed the shipping and storage temperature gradient of 45°F/hr (25°C/hr).

PART 1

1U1N Procedures

Chapter 2, "1U1N Configuration Equipment Installation"

Chapter 3, "Install AC Power Cables"

Chapter 4, "Install management network I/O cables"

Chapter 5, "Install data network I/O cables"

Chapter 6, "Update the Install Database"

CHAPTER 2

1U1N Configuration Equipment Installation

This chapter provides information for installation of the equipment used in a 1U1N configuration.

Topics include:

- Installation of the equipment in the cabinet 18
- Installation in cabinets with single-phase power distribution 18
- Installation in cabinets with 3-phase delta power distribution 21
- Installation in cabinets with 3-phase wye power distribution 25
- Cabinet rail kits 29
- Determine rail kit that will be used 31
- Install the static rail assemblies in the cabinet 31
- Install the static chassis rails on the server 32
- Install the server in the cabinet 33
- Install the sliding rail assemblies 34
- Install the server on sliding rail assemblies 35
- Routing the cables 37
- Install bezel 37

Installation of the equipment in the cabinet

Always begin component installation at the bottom of the cabinet and work upward. Install components at the lowest available space for that component type.

Placement of the equipment in the cabinet is dependent on the type of power distribution units installed in the cabinet. Refer to the equipment stack up guidelines for each type of power distribution.

- Install the RX630 servers as described in the following chapters. Most of the servers will function as VxFlex Ready Node nodes, and at least one will function as a management server. The procedures for physical installation in the rack or cabinet apply to both types. Once the servers have been installed, refer to the *VxFlex Ready Node Series Hardware Configuration and Operating System Installation Guide* for server configuration and operating system installation procedures.
- Install the management switches
- Install the data switches

Installation in cabinets with single-phase power distribution

Note

Install all the equipment in the cabinet before installing and connecting the power and I/O cables.

- Install the equipment as described in Installation of the equipment in the cabinet on page 18.
- If you are installing the minimum configuration, refer to the figure and table below for minimum configurations for the equipment stack up in the cabinet.
- If you are installing the maximum configuration, refer to the figure and table below for maximum configurations for the equipment stack up in the cabinet.

Table 3 Minimum configuration in single-phase power distribution cabinets

Component Function	Description	Quantity	Cabinet U Space
Data Server	RX630 Server	3	2 - 4
Management Server	Management Server	1	18
Management Switch	Customer provided 1 GbE switch	1	19
Data Switch	Customer provided 10 GbE switch	2	21 - 22

Figure 1 Cabinet stack up for a minimum configuration

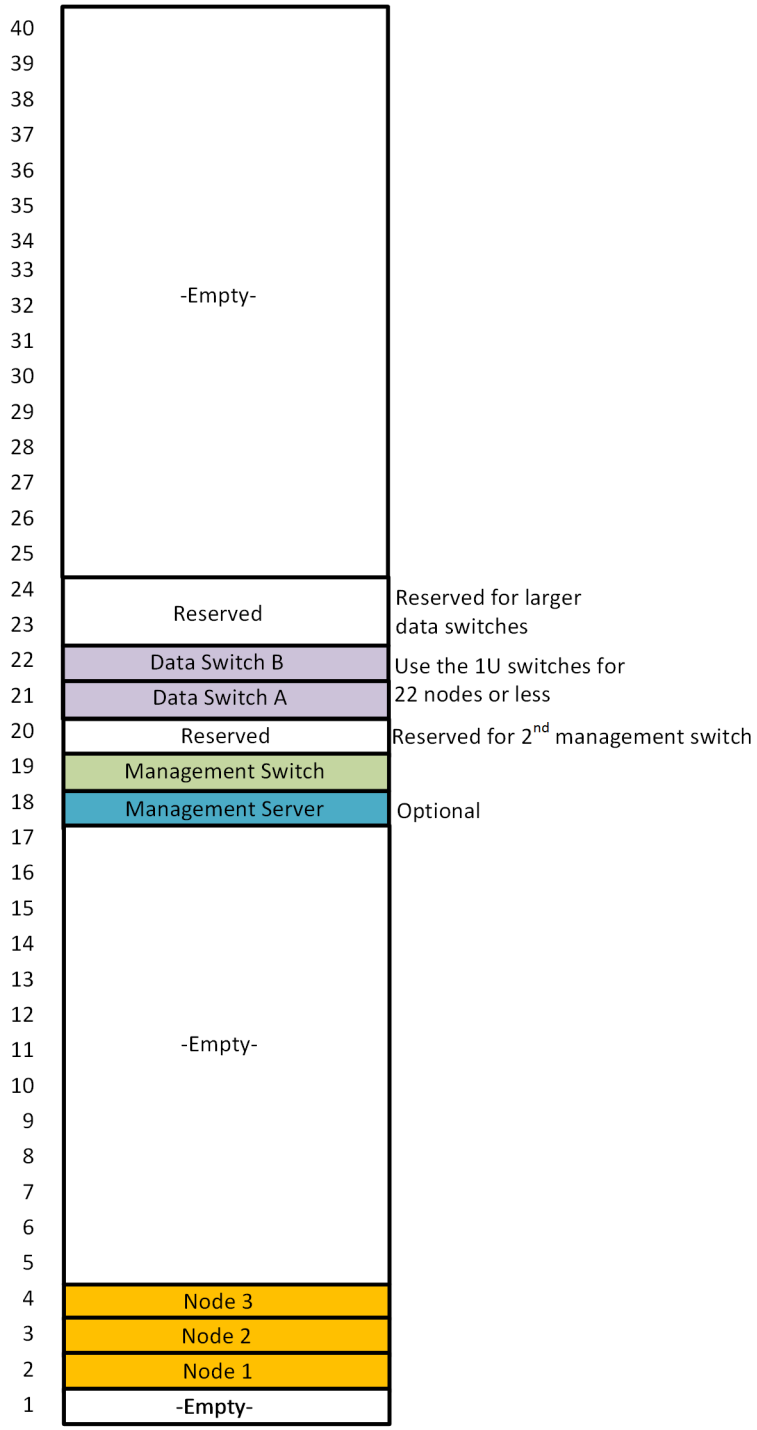

Table 4 Maximum configuration in single-phase power distribution cabinets

Component Function	Description	Quantity	Cabinet U Space
Data Server	RX630 Server	32	2 - 17 and 25 - 40

Table 4 Maximum configuration in single-phase power distribution cabinets (continued)

Component Function	Description	Quantity	Cabinet U Space
Management Server	Management Server	1	18
Management Switch	Customer provided 1 GbE switch	2	19 - 20
Data Switch	Customer provided 10 GbE switch	2	21 - 24

Figure 2 Cabinet stack up for a maximum configuration

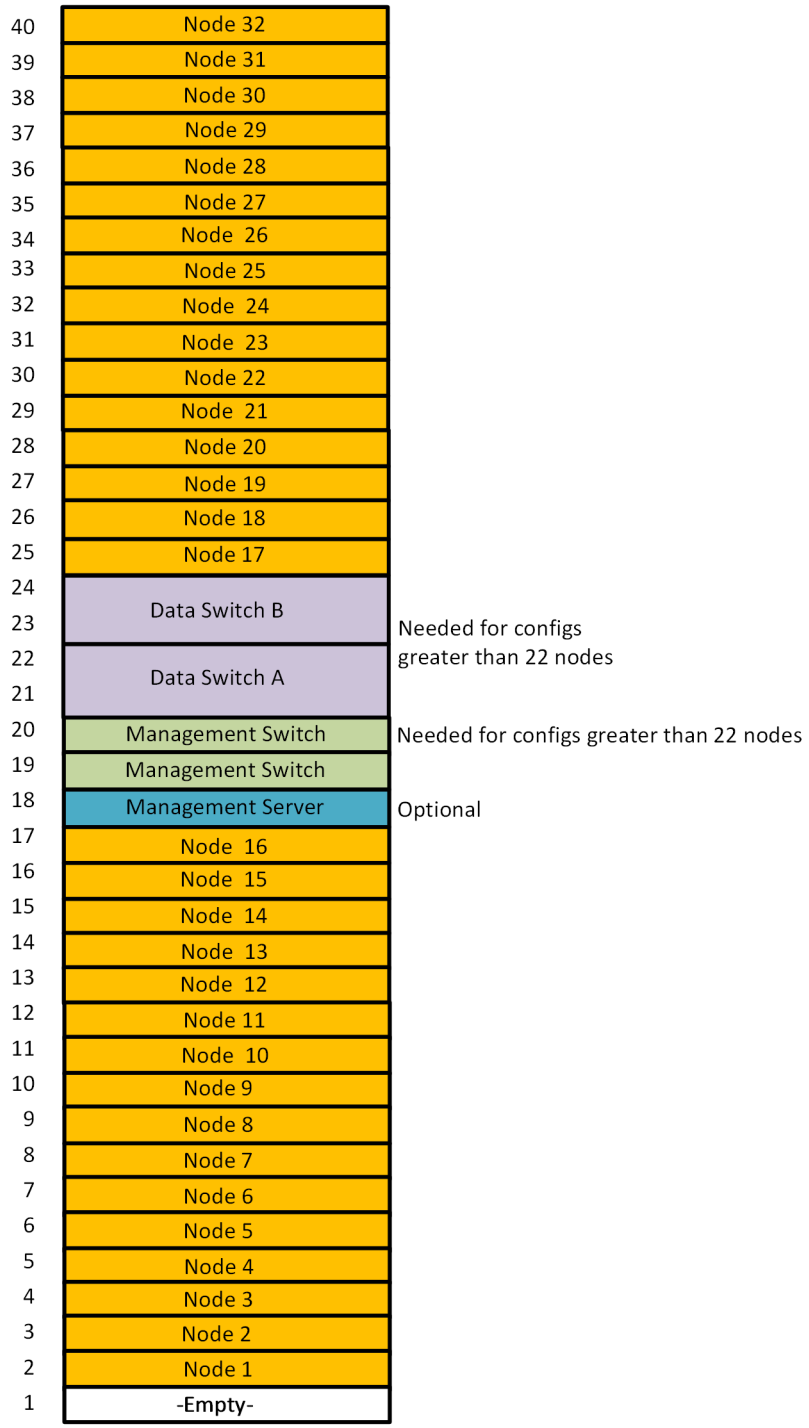

Installation in cabinets with 3-phase delta power distribution

Note

Install all the equipment in the cabinet before installing and connecting the power and I/O cables.

- Install the equipment as described in Installation of the equipment in the cabinet on page 18.
- If you are installing the minimum configuration, refer to the figure and table below for minimum configurations for the equipment stack up in the cabinet.
- If you are installing the maximum configuration, refer to the figure and table below for maximum configurations for the equipment stack up in the cabinet.

Table 5 Minimum configuration in 3-phase delta power distribution cabinets

Component Function	Description	Quantity	Cabinet U Space
Data Server	RX630 Server	3	2 - 4
Management Server	Management Server	1	20
Management Switch	Customer provided 1 GbE switch	1	21
Data Switch	Customer provided 10 GbE switch	2	23-24

Figure 3 Cabinet stack up for a minimum configuration

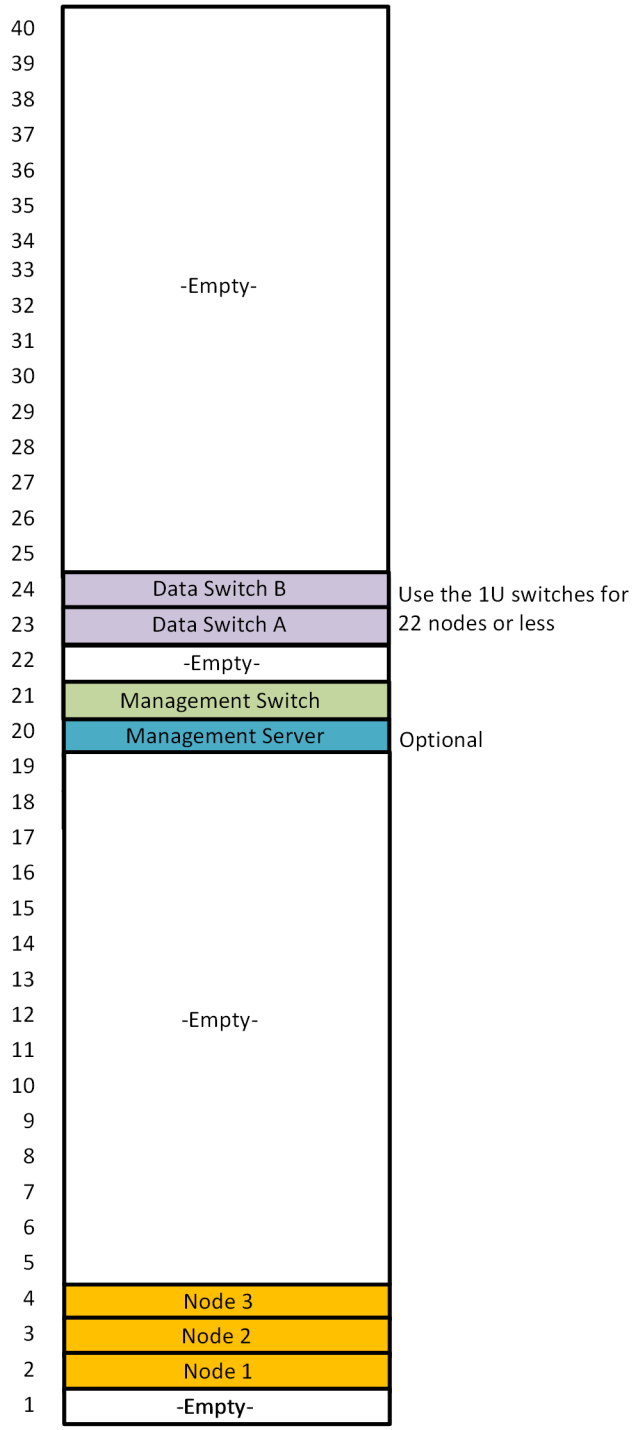

Table 6 Stack up for a maximum configuration

Component Function	Description	Quantity	Cabinet U Space
Data Server	RX630 Server	32	2 - 17 and 25 - 34

Table 6 Stack up for a maximum configuration (continued)

Component Function	Description	Quantity	Cabinet U Space
Management Server	Management Server	1	18
Management Switch	Customer provided 1 GbE switch	2	19 - 20
Data Switch	Customer provided 10 GbE switch	2	21 - 24

Figure 4 Cabinet stack up for a maximum configuration

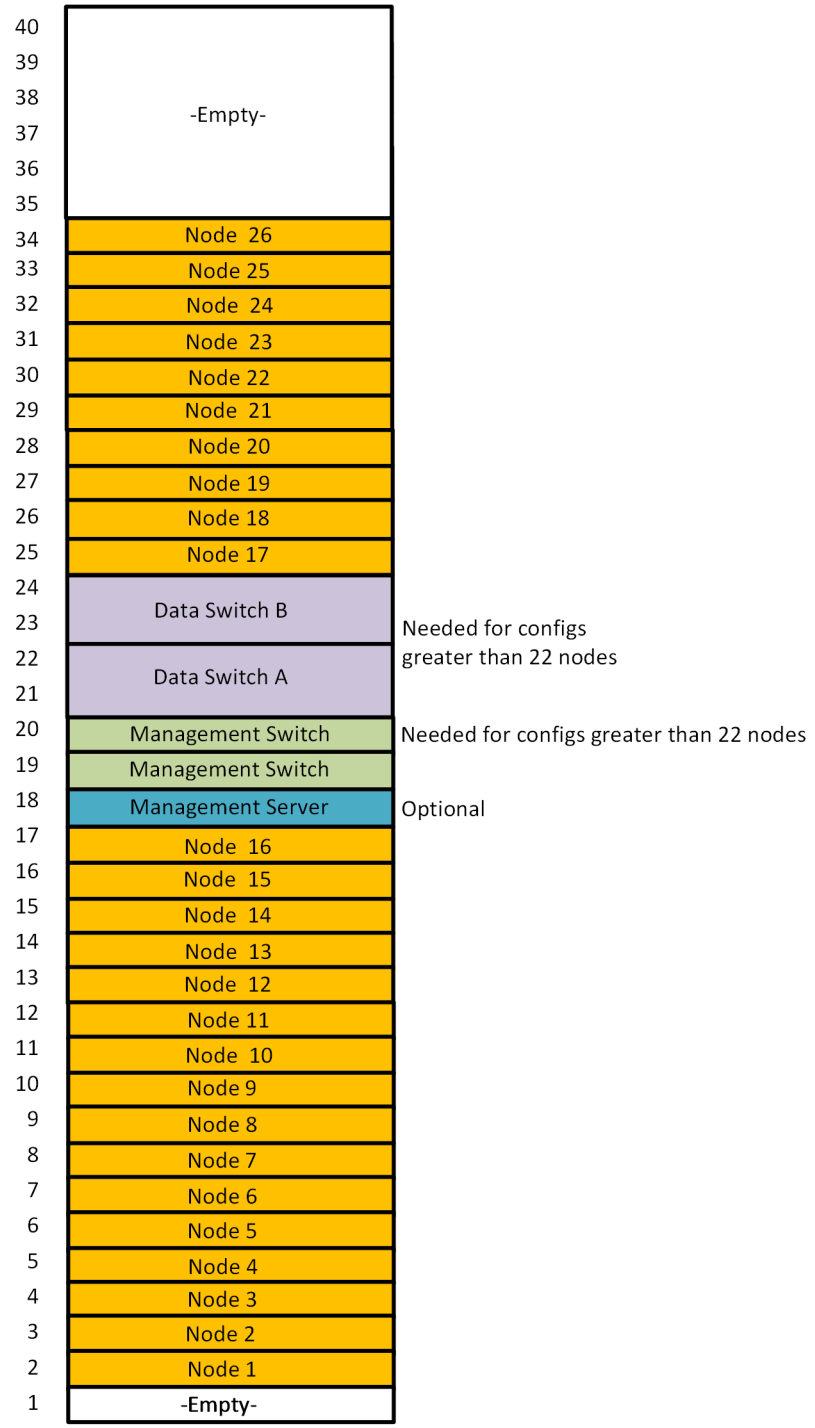

Installation in cabinets with 3-phase wye power distribution

Note

Install all the equipment in the cabinet before installing and connecting the power and I/O cables.

- Install the equipment as described in Installation of the equipment in the cabinet on page 18.
- If you are installing the minimum configuration, refer to the figure and table below for minimum configurations for the equipment stack up in the cabinet.
- If you are installing the maximum configuration, refer to the figure and table below for maximum configurations for the equipment stack up in the cabinet.

Table 7 Minimum configuration in 3-phase wye power distribution cabinets

Component Function	Description	Quantity	Cabinet U Space
Data Server	RX630 Server	3	2 - 4
Management Server	Management Server	1	20
Management Switch	Customer provided 1 GbE switch	1	21
Data Switch	Customer provided 10 GbE switch	2	23-24

Figure 5 Cabinet stack up for a minimum configuration

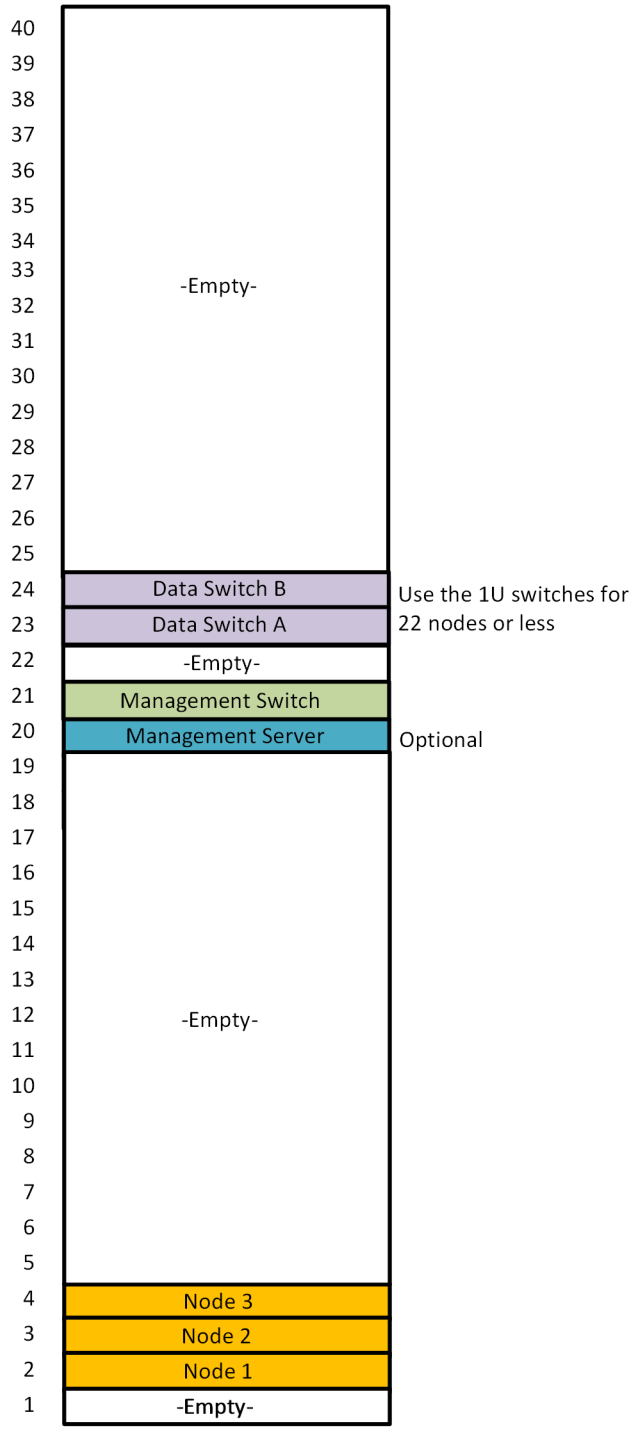

Table 8 Maximum configuration in 3-phase wye power distribution cabinets

Component Function	Description	Quantity	Cabinet U Space
Data Server	RX630 Server	32	2 - 17 and 25 - 36

Table 8 Maximum configuration in 3-phase wye power distribution cabinets (continued)

Component Function	Description	Quantity	Cabinet U Space
Management Server	Management Server	1	18
Management Switch	Customer provided 1 GbE switch	2	19 - 20
Data Switch	Customer provided 10 GbE switch	2	21 - 24

Figure 6 Cabinet stack up for a maximum configuration

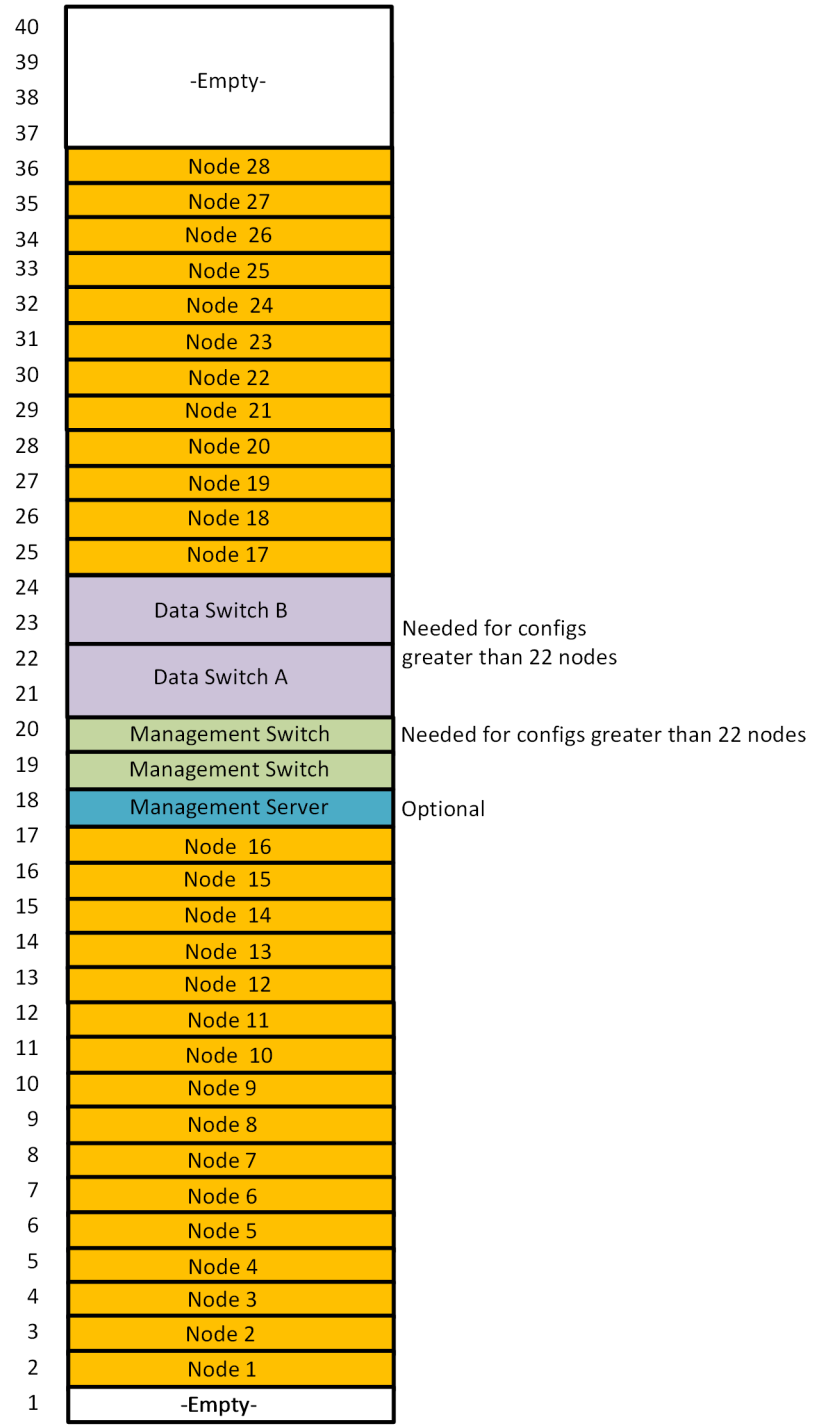

Cabinet rail kits

There are two types of rail kits used to install the PowerEdge server in a cabinet:

- **Static Rail Kit** -- The static rail kit allows the server to be extracted a short distance before the rail locks. The travel stop position is intended for repositioning your grip for server removal. It is not intended for internal service of the server. The server must be removed from the cabinet so that the system cover can be removed to access the internal FRUs. The static rail kit consists of the following items:

  Two Dell™ ReadyRails™ static rails (1)
  Two chassis rails (2)
  Two hook and loop straps (3)

  Figure 7 Static rail kit

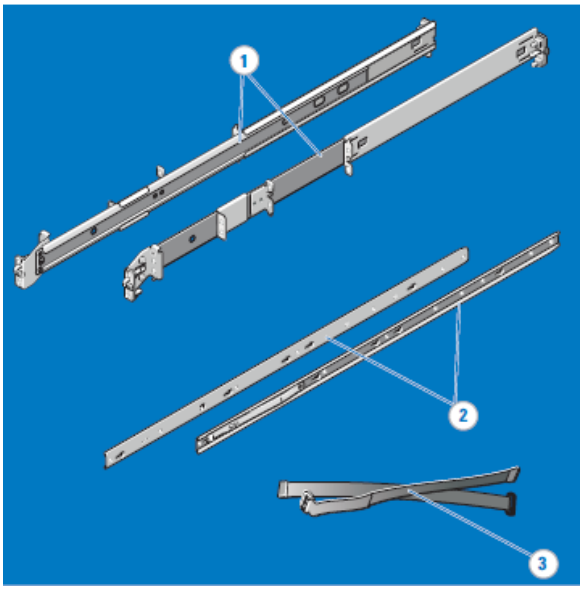

- **Sliding Rail Kit** -- The sliding rail kit allows the server to be extended from the cabinet so that the system cover can be removed to access the internal FRUs. The sliding rail kit consists of the following items:

  Two B6 Dell™ ReadyRails™ II sliding rail assemblies (1)
  Two hook and loop straps (2)

Figure 8 Sliding rail kit

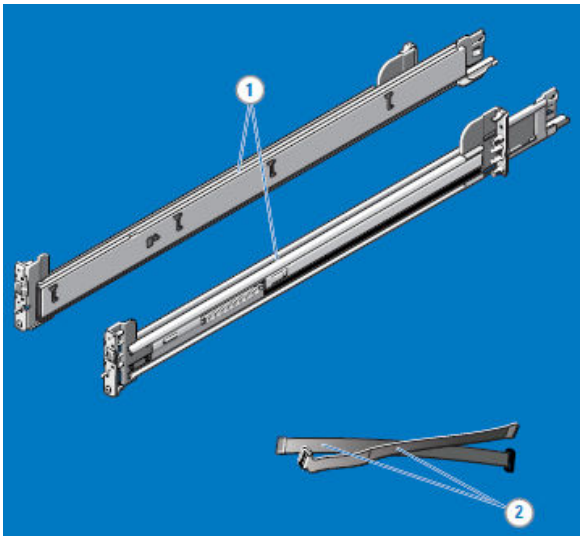

Determine rail kit that will be used

Unpack the rail kit and determine which type of rail kit is being used for installation of the server.

Static Rail Kit -- Install the static rail kit and server as described in the procedures later in this chapter.

Sliding Rail Kit -- Install the sliding rail kit and server as described in the procedures later in this chapter.

Install the static rail assemblies in the cabinet

This procedures describes installation of the static rail assemblies in the cabinet.

Procedure

1. Position the left and right rail end pieces labeled FRONT facing inward and orient each end piece to seat in the holes on the front side of the vertical cabinet flanges (1).
2. Align each end piece in the bottom and top holes of the desired U spaces (2).
3. Engage the back end of the rail until it fully seats on the vertical cabinet flange and the latch clicks into place. Repeat these steps to position and seat the front end piece on the vertical cabinet flange (3).

Note

To remove the rails, pull on the latch release button on the end piece midpoint and unseat each rail (4).

Figure 9 Installing static rail assemblies

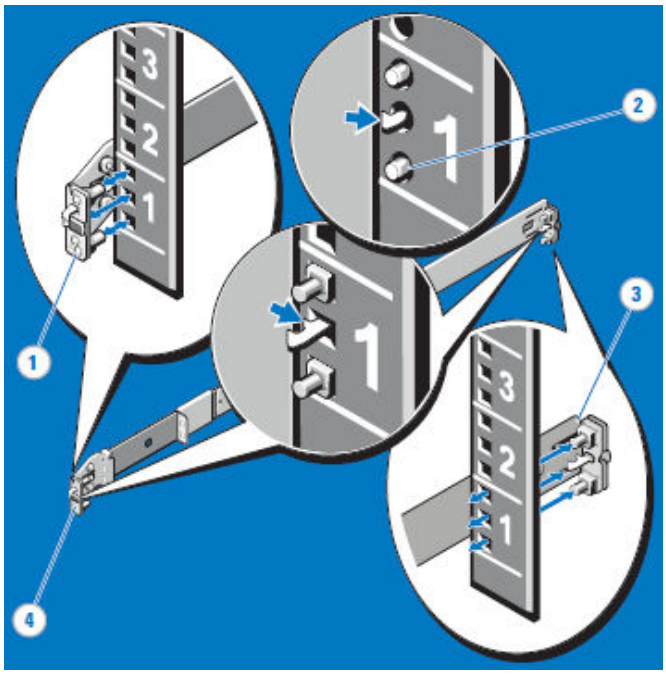

Install the static chassis rails on the server

This procedures describes installation of the static chassis rails on the server.

CAUTION

The server is heavy and should be handled by two people. To avoid personal injury and/or damage to the equipment, do not attempt to handle the server without a mechanical lift and/or help from another person.

Procedure

1. Place the server on a level surface and align the keyhole slots on the chassis rails with the pins on the server (1).
2. Slide the chassis rails toward the back of the server until they lock into place. To remove the chassis rails, lift the lock spring until it clears the pin and slide the chassis rails toward the front of the server until the pins can slip through the keyhole slots (2).

Figure 10 Installing static chassis rails

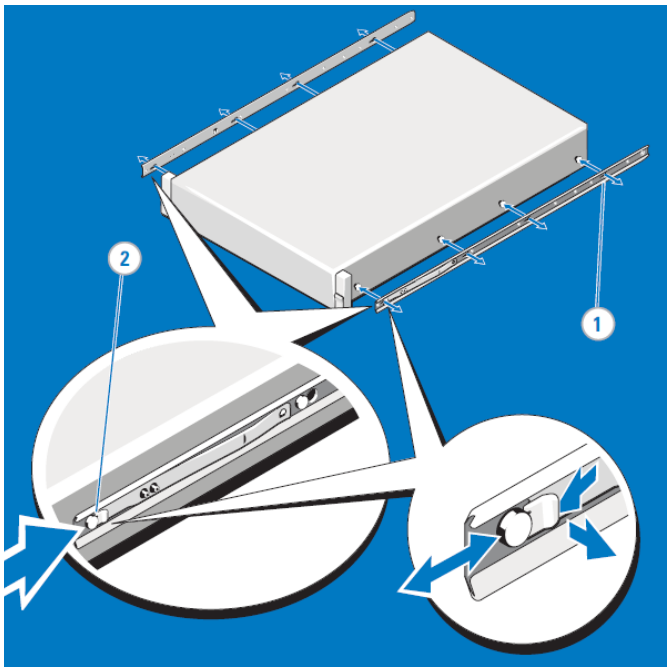

Install the server in the cabinet

This procedures describes installation of the server in the cabinet.

⚠ CAUTION

The server is heavy and should be installed in a cabinet by two people. To avoid personal injury and/or damage to the equipment, do not attempt to install the server in a cabinet without a mechanical lift and/or help from another person.

Procedure

1. Insert the ends of the chassis rails into the front of the rails mounted to the cabinet and push the server into the cabinet (1).
2. Depending on the rail configuration, the latches on the front of the server engage automatically (2). If the latches do not engage automatically, secure the server in the cabinet by tightening the screw under each latch (3).
3. Connect I/O and power cables as described in your system cabling documentation.
4. Thread the Velcro straps through the slots on the back brackets and use the Velcro straps to secure the cables (4).

Note

To remove the server from the cabinet, pull the server out until the travel stops are reached. Locate the blue tabs on the sides of the chassis rails. Push the tabs inward and pull the server until the chassis rails are clear of the rails (5). The travel stop position is intended for repositioning your grip for server removal. It is not intended for service. You must be prepared to support the weight of the server when the chassis rails separate from the cabinet rails

Figure 11 Install the server

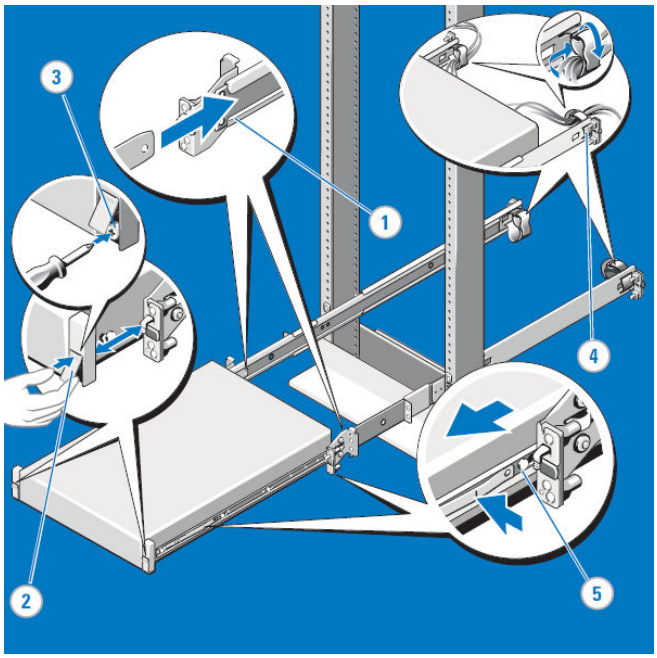

Install the sliding rail assemblies

This procedures describes installation of the sliding rail assemblies in the cabinet.

Procedure

1. Position the left and right rail end pieces labeled FRONT facing inward and orient each end piece to seat in the holes on the front side of the vertical cabinet flanges (1).
2. Align each end piece in the bottom and top holes of the desired U spaces (2).
3. Engage the back end of the rail until it fully seats on the vertical cabinet flange and the latch clicks into place. Repeat these steps to position and seat the front end piece on the vertical cabinet flange (3).

Note

To remove the rails, pull on the latch release button on the end piece midpoint and unseat each rail (4).

Figure 12 Installing sliding rail assemblies

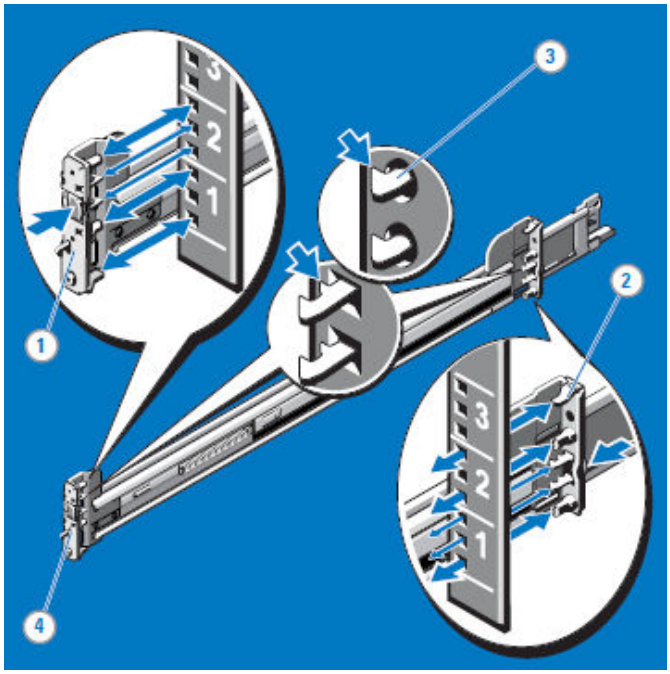

Install the server on sliding rail assemblies

This procedures describes installation of the server on the sliding rail assemblies.

⚠ CAUTION

The server is heavy and should be installed in a cabinet by two people. To avoid personal injury and/or damage to the equipment, do not attempt to install the server in a cabinet without a mechanical lift and/or help from another person.

Procedure

1. Pull the inner slide rails out of the cabinet until they lock into place (1).
2. With the help of second person, position the server above the extended rails.
3. Locate the rear rail standoff on each side of the server and lower them into the rear J-slots on the slide assemblies (2).
4. Rotate the server downward until all the rail standoffs are seated in the J-slots (3).
5. Push the server inward until the lock levers click into place.
6. Press the slide-release lock buttons on both rails (4).

Figure 13 Install server on sliding rail assemblies

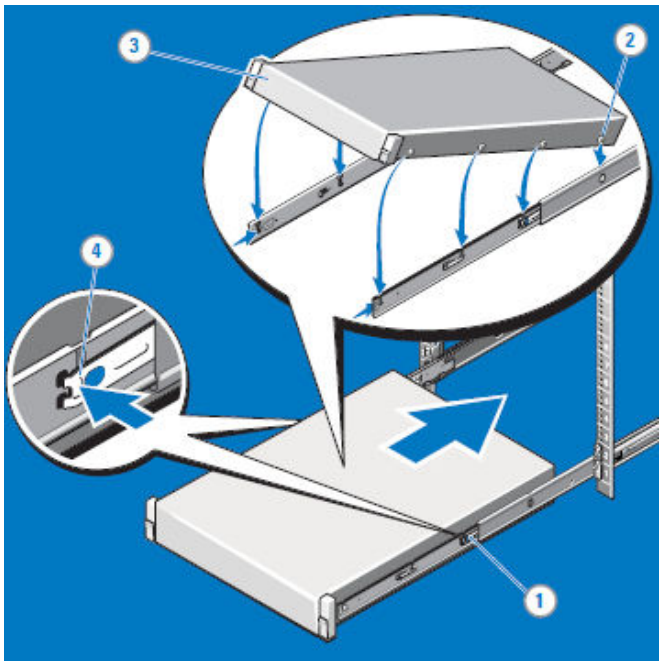

7. Push the server into the cabinet. The slam latch on either side of the server engage automatically as the server is pushed into the cabinet (1).

Note

The slam latches are released by pulling up on the latches (2). To secure the server for unstable environments, locate the hard-mount screw under each latch and tighten each screw with a #2 Phillips screwdriver (3).

Figure 14 Secure the server in the cabinet

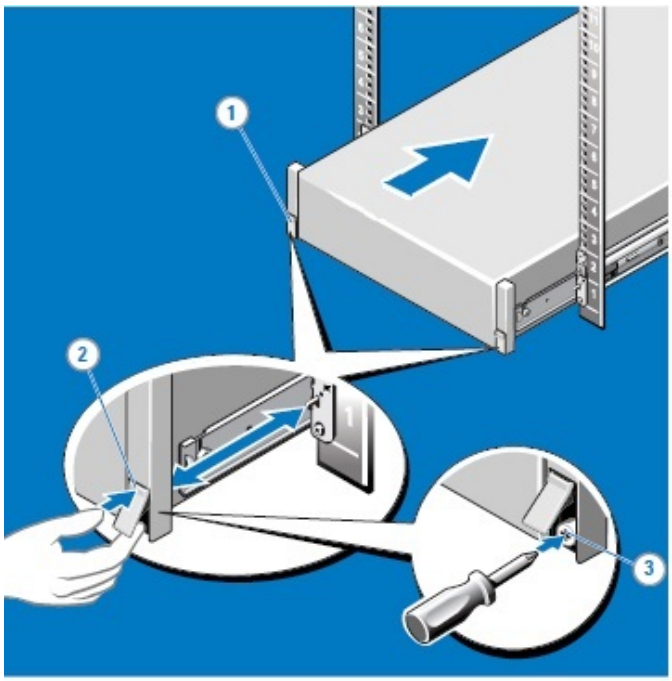

Routing the cables

This procedure describes connecting cables and use of the two hook and loop straps provided in the rail kit to route the cables at the back of the server.

Procedure

1. Connect I/O and power cables as described in your system cabling documentation.
2. Locate the outer CMA brackets on the interior sides of both cabinet flanges (1).
3. Bundle the cables gently, pulling them clear of the server connectors to the left and right sides (2).
4. Thread the hook and loop straps through the tooled slots on the outer CMA brackets on each side of the server to secure the cable bundles (3).

Figure 15 Hook and loop straps

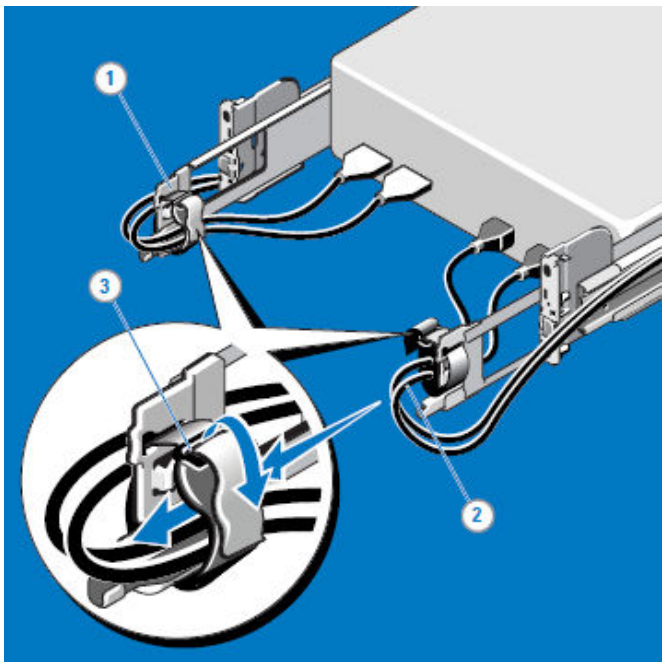

Install bezel

Bezels are application specific, and may not appear as shown. This procedure can be used to install all bezels.

Procedure

1. Position right side of bezel on the server bracket. Rotate the bezel inward so that it is flush with front of the server and the latch on the left side secures the bezel.
2. Lock the bezel with the provided key and store the key in a secure place.

Figure 16 Install the bezel

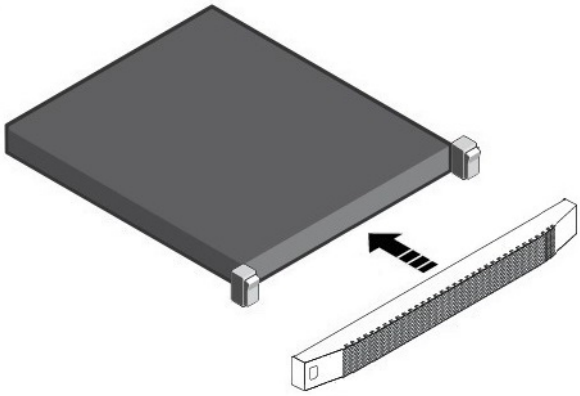

CHAPTER 3

Install AC Power Cables

This chapter provides sample diagrams and a connection table for installing and connecting power cables to power distribution units (PDUs) and the equipment. This information is provided as an example only, and may differ from your system setup, depending on the number of nodes and the type of PDUs used in your system.

- Guidelines for installing and connecting AC power cables 40
- Sample single-phase wiring for 1U1N configuration 41

Guidelines for installing and connecting AC power cables

Use the following figure as reference for connectors on the rear panel of the servers and switches.

Figure 17 Connectors on rear panel of servers and switches

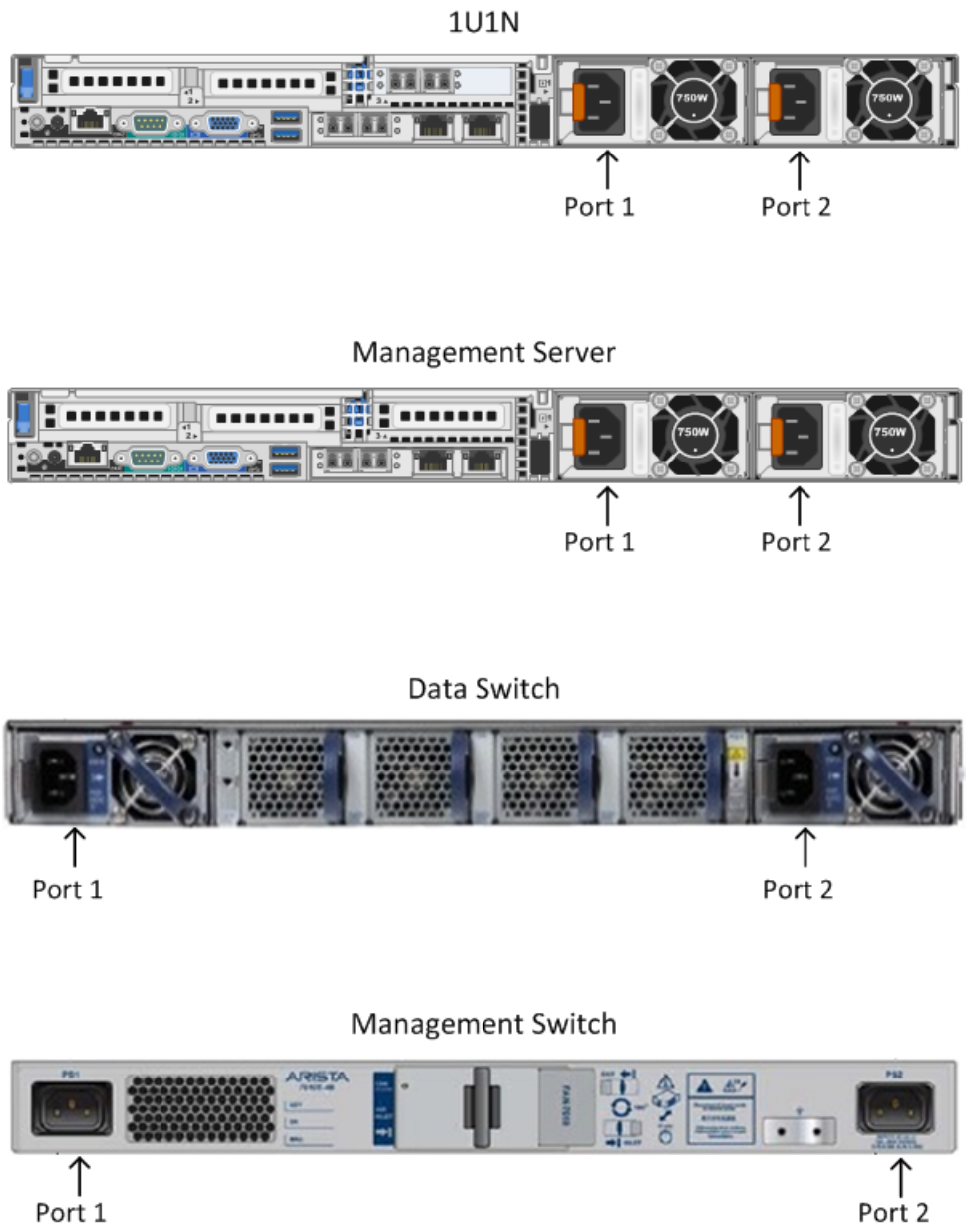

Note

As cables are installed and connected, dress and tie cables frequently so that excess slack does not interfere with routing of adjacent cables.

Sample single-phase wiring for 1U1N configuration

The following diagram and table provide a typical example for connecting power cables in racks with single-phase power distribution units. In this example, PDUs with 14 power inlets are used.

Figure 18 Single-phase power distribution

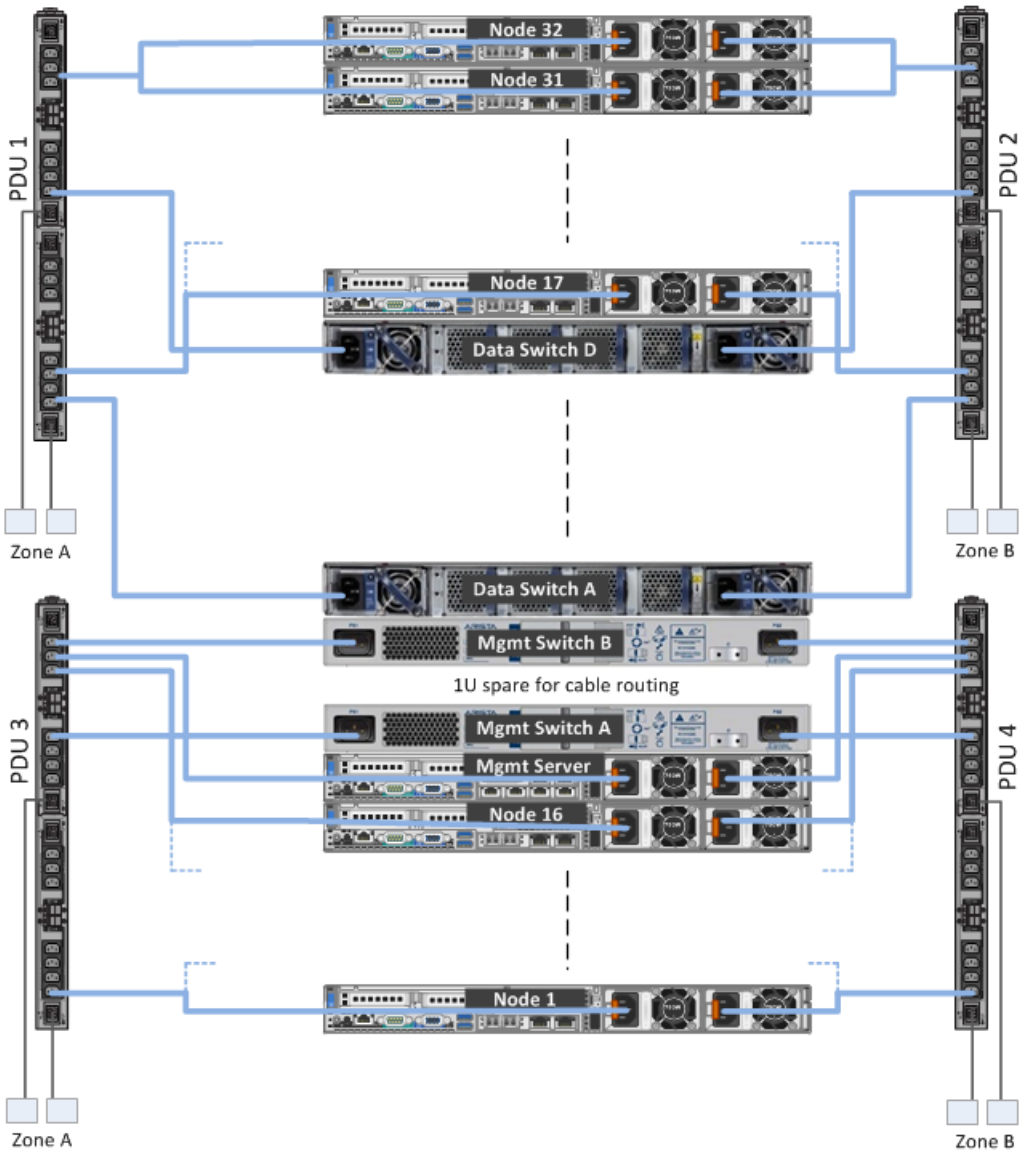

Table 9 Single-phase power distribution cabling (from top to bottom)

Source	Destination
Node 32 PSU1	PDU 1 Port 2
Node 32 PSU2	PDU 2 Port 2

Table 9 Single-phase power distribution cabling (from top to bottom) (continued)

Source	Destination
Node 31 PSU1	PDU 1 Port 2
Node 31 PSU2	PDU 2 Port 2
Node 30 PSU1	PDU 1 Port 3
Node 30 PSU2	PDU 2 Port 3
Node 29 PSU1	PDU 1 Port 3
Node 29 PSU2	PDU 2 Port 3
Node 28 PSU1	PDU 1 Port 5
Node 28 PSU2	PDU 2 Port 5
Node 27 PSU1	PDU 1 Port 5
Node 27 PSU2	PDU 2 Port 5
Node 26 PSU1	PDU 1 Port 6
Node 26 PSU2	PDU 2 Port 6
Node 25 PSU1	PDU 1 Port 6
Node 25 PSU2	PDU 2 Port 6
Data Switch D	PDU 1 Port 7
Data Switch D	PDU 2 Port 7
Node 24 PSU1	PDU 1 Port 8
Node 24 PSU2	PDU 2 Port 8
Node 23 PSU1	PDU 1 Port 8
Node 23 PSU2	PDU 2 Port 8
Node 22 PSU1	PDU 1 Port 9
Node 22 PSU2	PDU 2 Port 9
Node 21 PSU1	PDU 1 Port 9
Node 21 PSU2	PDU 2 Port 9
Data Switch C	PDU 1 Port 10
Data Switch C	PDU 2 Port 10
Node 20 PSU1	PDU 1 Port 11
Node 20 PSU2	PDU 2 Port 11
Node 19 PSU1	PDU 1 Port 11
Node 19 PSU2	PDU 2 Port 11
Node 18 PSU1	PDU 1 Port 12
Node 18 PSU2	PDU 2 Port 12
Node 17 PSU1	PDU 1 Port 12

Table 9 Single-phase power distribution cabling (from top to bottom) (continued)

Source	Destination
Node 17 PSU2	PDU 2 Port 12
Data Switch B	PDU 1 Port 13
Data Switch B	PDU 2 Port 13
Data Switch A	PDU 1 Port 14
Data Switch A	PDU 2 Port 14
Management Switch B	PDU 3 Port 1
Management Switch B	PDU 4 Port 1
Management Server	PDU 3 Port 2
Management Server	PDU 4 Port 2
Node 16 PSU1	PDU 3 Port 3
Node 16 PSU2	PDU 4 Port 3
Node 15 PSU1	PDU 3 Port 3
Node 15 PSU2	PDU 4 Port 3
Management Switch A	PDU 3 Port 4
Management Switch A	PDU 4 Port 4
Node 14 PSU1	PDU 3 Port 5
Node 14 PSU2	PDU 4 Port 5
Node 13 PSU1	PDU 3 Port 6
Node 13 PSU2	PDU 4 Port 6
Node 12 PSU1	PDU 3 Port 6
Node 12 PSU2	PDU 4 Port 6
Node 11 PSU1	PDU 3 Port 7
Node 11 PSU2	PDU 4 Port 7
Node 10 PSU1	PDU 3 Port 7
Node 10 PSU2	PDU 4 Port 7
Node 9 PSU1	PDU 3 Port 9
Node 9 PSU2	PDU 4 Port 9
Node 8 PSU1	PDU 3 Port 9
Node 8 PSU2	PDU 4 Port 9
Node 7 PSU1	PDU 3 Port 10
Node 7 PSU2	PDU 4 Port 10
Node 6 PSU1	PDU 3 Port 10
Node 6 PSU2	PDU 4 Port 10

Table 9 Single-phase power distribution cabling (from top to bottom) (continued)

Source	Destination
Node 5 PSU1	PDU 3 Port 12
Node 5 PSU2	PDU 4 Port 12
Node 4 PSU1	PDU 3 Port 13
Node 4 PSU2	PDU 4 Port 13
Node 3 PSU1	PDU 3 Port 13
Node 3 PSU2	PDU 4 Port 13
Node 2 PSU1	PDU 3 Port 14
Node 2 PSU2	PDU 4 Port 14
Node 1 PSU1	PDU 3 Port 14
Node 1 PSU2	PDU 4 Port 14

CHAPTER 4

Install management network I/O cables

This chapter provides the diagrams and tables for installing and connecting cables for the management network.

Topics include:

- Guidelines for installing and connecting management network cables 46
- Management network A, nodes 1 - 16 cabling 46
- Management network A, nodes 17 - 22 cabling 48
- Management network B, nodes 23 - 32 cabling 49

Guidelines for installing and connecting management network cables

Use the following illustration as reference for console and management ports on the switches.

Figure 19 Console and management ports on switches

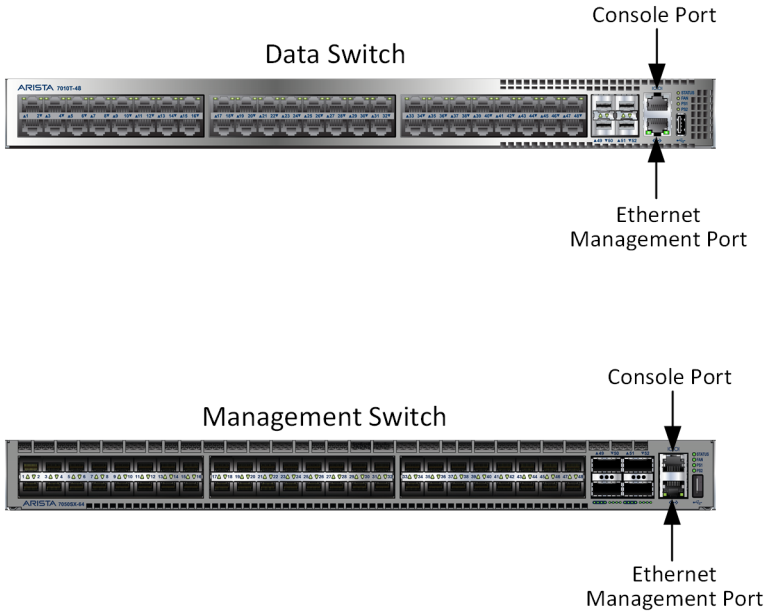

Note

As cables are installed and connected, dress and tie cables frequently so that excess slack does not interfere with routing of adjacent cables.

Refer to the management network cable diagrams applicable to your installation:

- Management network A, nodes 1 - 16 Management network A, nodes 1 - 16 cabling on page 46.
- Management network B, nodes 17 - 22 Management network A, nodes 17 - 22 cabling on page 48.
- Management network B, nodes 23 - 32 Management network B, nodes 23 - 32 cabling on page 49.

Management network A, nodes 1 - 16 cabling

Use the following figure and table to connect cables for management network A, nodes 1 - 16.

Figure 20 Management A, nodes 1 - 16 cabling example

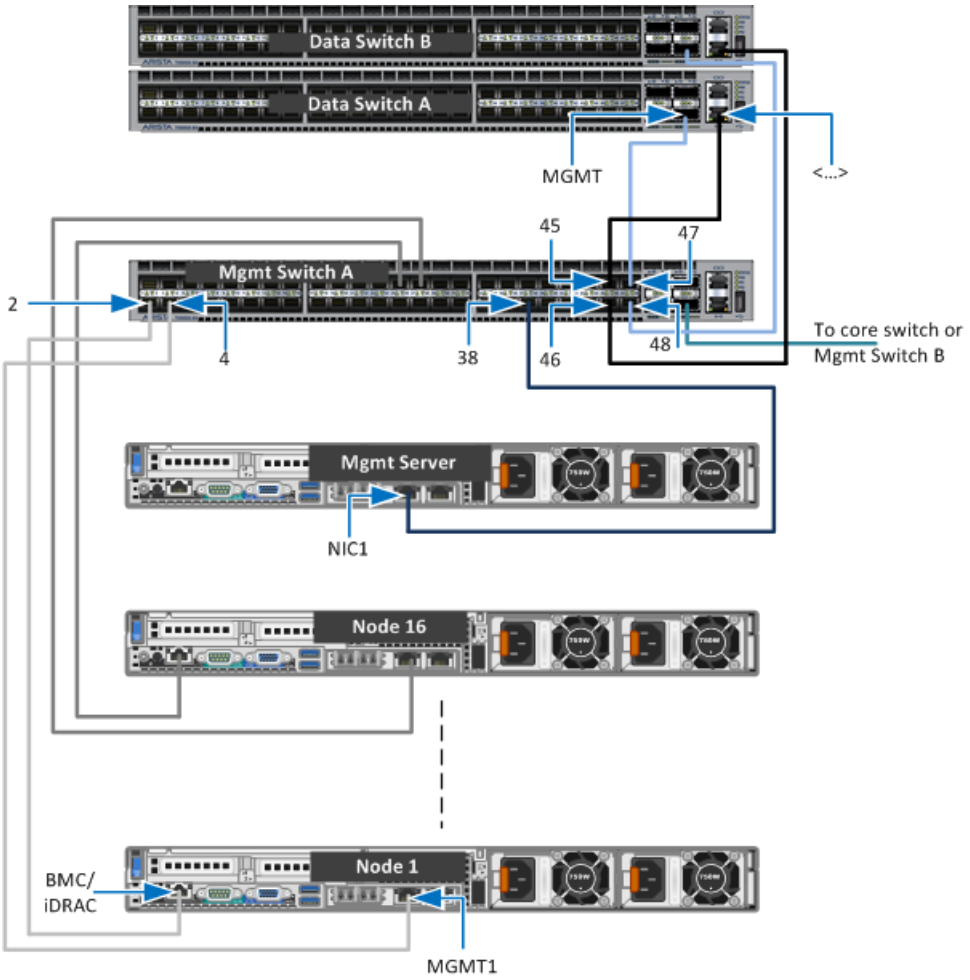

Table 10 Management A, nodes 1 -16 cabling

Source	Destination
Node 1 BMC (iDRAC)	Management SwitchA Port 2
Node 1 MGMT1	Management SwitchA Port 4
Node 2 BMC (iDRAC)	Management SwitchA Port 6
Node 2 MGMT1	Management SwitchA Port 8
Node 3 BMC (iDRAC)	Management SwitchA Port 10
Node 3 MGMT1	Management SwitchA Port 12
Node 4 BMC (iDRAC)	Management SwitchA Port 14
Node 4 MGMT1	Management SwitchA Port 16
Node 5 BMC (iDRAC)	Management SwitchA Port 18
Node 5 MGMT1	Management SwitchA Port 20
Node 6 BMC (iDRAC)	Management SwitchA Port 22

Table 10 Management A, nodes 1 -16 cabling (continued)

Source	Destination
Node 6 MGMT1	Management SwitchA Port 24
Node 7 BMC (iDRAC)	Management SwitchA Port 26
Node 7 MGMT1	Management SwitchA Port 28
Node 8 BMC (iDRAC)	Management SwitchA Port 30
Node 8 MGMT1	Management SwitchA Port 32
Node 9 BMC (iDRAC)	Management SwitchA Port 34
Node 9 MGMT1	Management SwitchA Port 36
Node 10 BMC (iDRAC)	Management SwitchA Port 1
Node 10 MGMT1	Management SwitchA Port 3
Node 11 BMC (iDRAC)	Management SwitchA Port 5
Node 11 MGMT1	Management SwitchA Port 7
Node 12 BMC (iDRAC)	Management SwitchA Port 9
Node 12 MGMT1	Management SwitchA Port 11
Node 13 BMC (iDRAC)	Management SwitchA Port 13
Node 13 MGMT1	Management SwitchA Port 15
Node 14 BMC (iDRAC)	Management SwitchA Port 17
Node 14 MGMT1	Management SwitchA Port 19
Node 15 BMC (iDRAC)	Management SwitchA Port 21
Node 15 MGMT1	Management SwitchA Port 23
Node 16 BMC (iDRAC)	Management SwitchA Port 25
Node 16 MGMT1	Management SwitchA Port 27
Data SwitchA <...> Port	Management SwitchA Port 45
Data SwitchB <...> Port	Management SwitchA Port 46
Data SwitchA MGMT Port	Management SwitchA Port 47
Data SwitchB MGMT Port	Management SwitchA Port 48
Management Server NIC1	Management SwitchA Port 38
Link to Core Switch or Management SwitchB	Management SwitchA Port 52

Management network A, nodes 17 - 22 cabling

Use the following table to connect cables for management network A, nodes 17 - 22.

Table 11 Management A, nodes 17 - 22 cabling

Source	Destination
Node 17 BMC (iDRAC)	Management SwitchA Port 29
Node 17 MGMT1	Management SwitchA Port 31
Node 18 BMC (iDRAC)	Management SwitchA Port 33
Node 18 MGMT1	Management SwitchA Port 35
Node 19 BMC (iDRAC)	Management SwitchA Port 37
Node 19 MGMT1	Management SwitchA Port 39
Node 20 BMC (iDRAC)	Management SwitchA Port 41
Node 20 MGMT1	Management SwitchA Port 43
Node 21 BMC (iDRAC)	Management SwitchA Port 38
Node 21 MGMT1	Management SwitchA Port 40
Node 22 BMC (iDRAC)	Management SwitchA Port 42
Node 22 MGMT1	Management SwitchA Port 44

Management network B, nodes 23 - 32 cabling

Use the following table to connect cables for the management network B, nodes 23 - 32.

Table 12 Management B, nodes 23 -32 cabling

Source	Destination
Node 23 BMC (iDRAC)	Management SwitchB Port 2
Node 23 MGMT1	Management SwitchB Port 4
Node 24 BMC (iDRAC)	Management SwitchB Port 6
Node 24 MGMT1	Management SwitchB Port 8
Node 25 BMC (iDRAC)	Management SwitchB Port 10
Node 25 MGMT1	Management SwitchB Port 12
Node 26 BMC (iDRAC)	Management SwitchB Port 14
Node 26 MGMT1	Management SwitchB Port 16
Node 27 BMC (iDRAC)	Management SwitchB Port 18
Node 27 MGMT1	Management SwitchB Port 20
Node 28 BMC (iDRAC)	Management SwitchB Port 1
Node 28 MGMT1	Management SwitchB Port 3
Node 29 BMC (iDRAC)	Management SwitchB Port 5
Node 29 MGMT1	Management SwitchB Port 7

Table 12 Management B, nodes 23 -32 cabling (continued)

Source	Destination
Node 30 BMC (iDRAC)	Management SwitchB Port 9
Node 30 MGMT1	Management SwitchB Port 11
Node 31 BMC (iDRAC)	Management SwitchB Port 13
Node 31 MGMT1	Management SwitchB Port 15
Node 32 BMC (iDRAC)	Management SwitchB Port 17
Node 32 MGMT1	Management SwitchB Port 19
Data SwitchC MGMT Port	Management SwitchB Port 47
Data SwitchD MGMT Port	Management SwitchB Port 48
Management Server NIC1	Management SwitchB Port 48
Link to Core Switch or Management SwitchA	Management SwitchB Port 52

CHAPTER 5

Install data network I/O cables

This chapter provides the diagrams and tables for installing and connecting cables for the data network.

Topics include:

- Data network A, nodes 1 - 22 cabling example.....52
- Data network B, nodes 1 - 22 cabling example.....53

Data network A, nodes 1 - 22 cabling example

Use the following figure and table to connect cables for the data network A, nodes 1 - 22. The node ports referred to in this table are 10 G ports.

Note

In this example, data switch ports have been intentionally left empty. These empty ports can be used for other user-allocated purposes. If no other use is required for the empty ports, nodes may be connected to the data switches without leaving empty ports. However, ensure that on each node, each NIC is connected to a different data switch (either Data Switch A or Data Switch B), in order to prevent a single point of failure in case a switch fails.

Figure 21 Data networks A and B cabling example

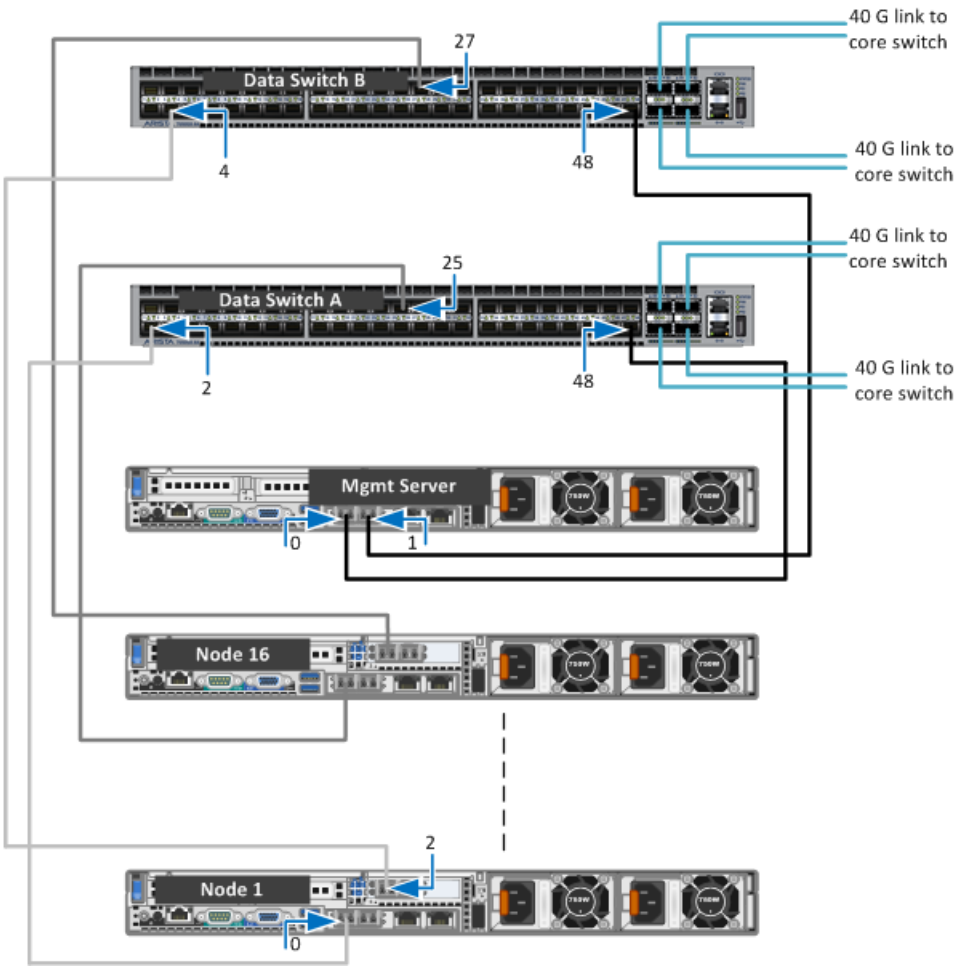

Table 13 Data A, nodes 1 - 22 cabling

Source	Destination
Node 1 Onboard Port 0	Data Switch A Port 2
Node 2 Onboard Port 0	Data Switch A Port 6

Table 13 Data A, nodes 1 - 22 cabling (continued)

Source	Destination
Node 3 Onboard Port 0	Data Switch A Port 10
Node 4 Onboard Port 0	Data Switch A Port 14
Node 5 Onboard Port 0	Data Switch A Port 18
Node 6 Onboard Port 0	Data Switch A Port 22
Node 7 Onboard Port 0	Data Switch A Port 26
Node 8 Onboard Port 0	Data Switch A Port 30
Node 9 Onboard Port 0	Data Switch A Port 34
Management Server Port 0	Data Switch A Port 48
Node 10 Onboard Port 0	Data Switch A Port 1
Node 11 Onboard Port 0	Data Switch A Port 5
Node 12 Onboard Port 0	Data Switch A Port 9
Node 13 Onboard Port 0	Data Switch A Port 13
Node 14 Onboard Port 0	Data Switch A Port 17
Node 15 Onboard Port 0	Data Switch A Port 21
Node 16 Onboard Port 0	Data Switch A Port 25
Node 17 Onboard Port 0	Data Switch A Port 29
Node 18 Onboard Port 0	Data Switch A Port 33
Node 19 Onboard Port 0	Data Switch A Port 37
Node 20 Onboard Port 0	Data Switch A Port 41
Node 21 Onboard Port 0	Data Switch A Port 38
Node 22 Onboard Port 0	Data Switch A Port 42

Data network B, nodes 1 - 22 cabling example

Use the following table to connect cables for the data network B, nodes 1 - 22. The node ports referred to in the table are 10 G ports.

Table 14 Data B, nodes 1 - 22 cabling

Source	Destination
Node 1 PCIe Port 2	Data Switch B Port 4
Node 2 PCIe Port 2	Data Switch B Port 8
Node 3 PCIe Port 2	Data Switch B Port 12
Node 4 PCIe Port 2	Data Switch B Port 16
Node 5 PCIe Port 2	Data Switch B Port 20

Table 14 Data B, nodes 1 - 22 cabling (continued)

Source	Destination
Node 6 PCIe Port 2	Data Switch B Port 24
Node 7 PCIe Port 2	Data Switch B Port 28
Node 8 PCIe Port 2	Data Switch B Port 32
Node 9 PCIe Port 2	Data Switch B Port 36
Management Server Port 1	Data Switch B Port 48
Node 10 PCIe Port 2	Data Switch B Port 3
Node 11 PCIe Port 2	Data Switch B Port 7
Node 12 PCIe Port 2	Data Switch B Port 11
Node 13 PCIe Port 2	Data Switch B Port 15
Node 14 PCIe Port 2	Data Switch B Port 19
Node 15 PCIe Port 2	Data Switch B Port 23
Node 16 PCIe Port 2	Data Switch B Port 27
Node 17 PCIe Port 2	Data Switch B Port 31
Node 18 PCIe Port 2	Data Switch B Port 35
Node 19 PCIe Port 2	Data Switch B Port 39
Node 20 PCIe Port 2	Data Switch B Port 43
Node 21 PCIe Port 2	Data Switch B Port 40
Node 22 PCIe Port 2	Data Switch B Port 44

CHAPTER 6

Update the Install Database

This chapter provides information to update the install database after all installation and configuration work is completed. The chapter contains the following topic:

- Update the install database 56

Update the install database

After all work is complete, use this procedure to update the install database.

Procedure

1. Open a web browser and navigate to the Dell EMC Business Services website at http://emc.force.com/BusinessServices.
2. In the **Post Sales** area, click **Install Base Group**.
3. Complete and submit the form.

PART 2

2U1N Procedures

Chapter 7, "2U1N Configuration Equipment Installation"

Chapter 8, "Wiring Diagrams for a 2U1N Configuration"

Chapter 9, "Update the Install Database"

CHAPTER 7

2U1N Configuration Equipment Installation

This chapter provides information for installation of the equipment used in a 2U1N configuration. The chapter contains the following topics:

- Installation of the equipment in the cabinet 60
- 2U1N configuration installation guidelines 60
- Cabinet rail kits 61
- Determine rail kit that will be used 63
- Install the static rail assemblies in the cabinet 63
- Install the static chassis rails on the server 64
- Install the server in the cabinet 64
- Install the sliding rail assemblies 65
- Install the server on sliding rail assemblies 66
- Routing the cables 68
- Install bezel 68

Installation of the equipment in the cabinet

Always begin component installation at the bottom of the cabinet and work upward. Install components at the lowest available space for that component type.

Placement of the equipment in the cabinet is described in 2U1N configuration installation guidelines on page 60.

- Install the RX730XD servers as described in the following topics. Once the servers have been installed, refer to the *VxFlex Ready Node Series Hardware Configuration and Operating System Installation Guide* for server configuration and operating system installation procedures.
- Install the management server as described in Part 1 of this guide, for 1U1N servers
- Install the data switches
- Install the management switches

2U1N configuration installation guidelines

Minimum and maximum stack up configurations are provided in this topic.

Assuming installation is into an empty rack, always begin component installation at the bottom of the cabinet and work upward. Install components at the lowest available space for that component type.

If you are installing the minimum configuration, the stack up will be as follows:

Table 15 Stack up for a minimum configuration

Component Function	Description	Quantity	Cabinet U Space
Data Server	RX730XD Server	3	2 - 7
Management Server	Management Server	1	20
Management Switch	Customer provided 1 GbE switch	1	21
Data Switch	Customer provided 10 GbE switch	2	23 - 24

If you are installing the maximum configuration, the stack up will be as follows:

Table 16 Stack up for a maximum configuration

Component Function	Description	Quantity	Cabinet U Space
Data Server	RX730XD Server	17	2 - 19 and 25 - 40
Management Server	Management Server	1	20
Management Switch	Customer provided 1 GbE switch	1	21

Table 16 Stack up for a maximum configuration (continued)

Component Function	Description	Quantity	Cabinet U Space
Data Switch	Customer provided 10 GbE switch	2	23 - 24

The following illustration represents the maximum 2U1N configuration.

Figure 22 Cabinet stack up for 2U1N configurations

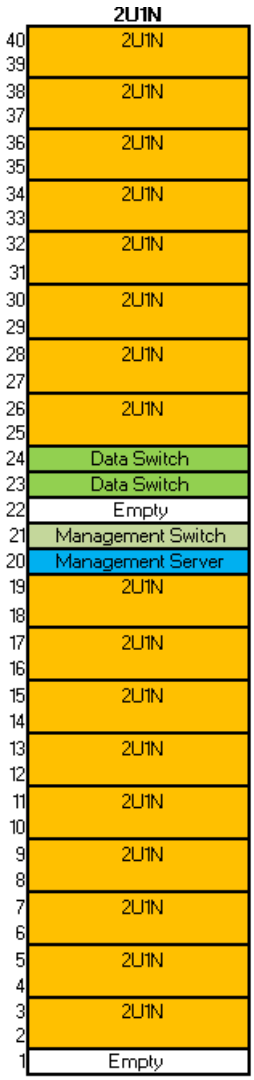

Cabinet rail kits

There are two types of rail kits used to install the PowerEdge server in a cabinet:

- **Static Rail Kit** -- The static rail kit allows the server to be extracted a short distance before the rail locks. The travel stop position is intended for repositioning

your grip for server removal. It is not intended for internal service of the server. The server must be removed from the cabinet so that the system cover can be removed to access the internal FRUs. The static rail kit consists of the following items:

Two Dell™ ReadyRails™ static rails (1)
Two chassis rails (2)
Two hook and loop straps (3)

Figure 23 Static rail kit

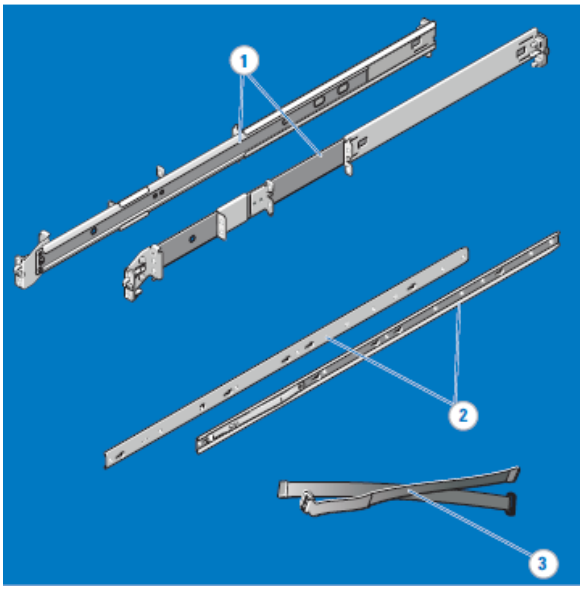

- **Sliding Rail Kit** -- The sliding rail kit allows the server to be extended from the cabinet so that the system cover can be removed to access the internal FRUs. The sliding rail kit consists of the following items:

  Two B6 Dell™ ReadyRails™ II sliding rail assemblies (1)
  Two hook and loop straps (2)

Figure 24 Sliding rail kit

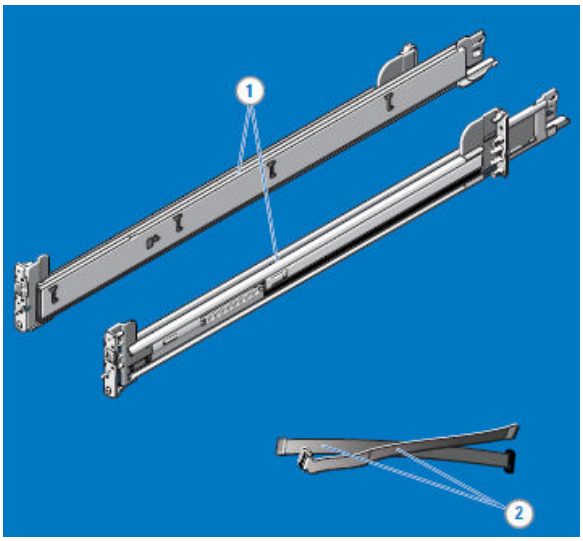

Determine rail kit that will be used

Unpack the rail kit and determine which type of rail kit is being used for installation of the server.

Static Rail Kit -- Install the static rail kit and server as described in the procedures later in this chapter.

Sliding Rail Kit -- Install the sliding rail kit and server as described in the procedures later in this chapter.

Install the static rail assemblies in the cabinet

This procedures describes installation of the static rail assemblies in the cabinet.

Procedure

1. Position the left and right rail end pieces labeled FRONT facing inward and orient each end piece to seat in the holes on the front side of the vertical cabinet flanges (1).
2. Align each end piece in the bottom and top holes of the desired U spaces (2).
3. Engage the back end of the rail until it fully seats on the vertical cabinet flange and the latch clicks into place. Repeat these steps to position and seat the front end piece on the vertical cabinet flange (3).

Note

To remove the rails, pull on the latch release button on the end piece midpoint and unseat each rail (4).

Figure 25 Installing static rail assemblies

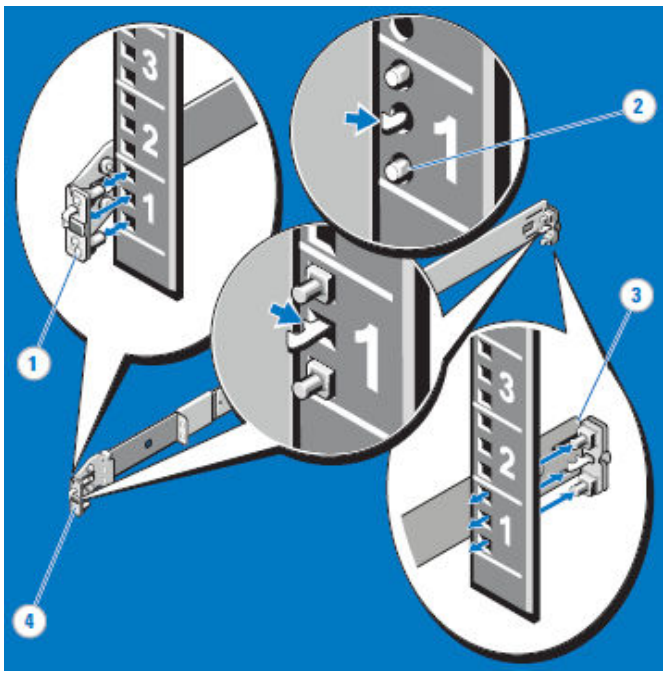

Install the static chassis rails on the server

This procedures describes installation of the static chassis rails on the server.

⚠ CAUTION

The server is heavy and should be handled by two people. To avoid personal injury and/or damage to the equipment, do not attempt to handle the server without a mechanical lift and/or help from another person.

Procedure

1. Place the server on a level surface and align the keyhole slots on the chassis rails with the pins on the server (1).
2. Slide the chassis rails toward the back of the server until they lock into place. To remove the chassis rails, lift the lock spring until it clears the pin and slide the chassis rails toward the front of the server until the pins can slip through the keyhole slots (2).

Figure 26 Installing static chassis rails

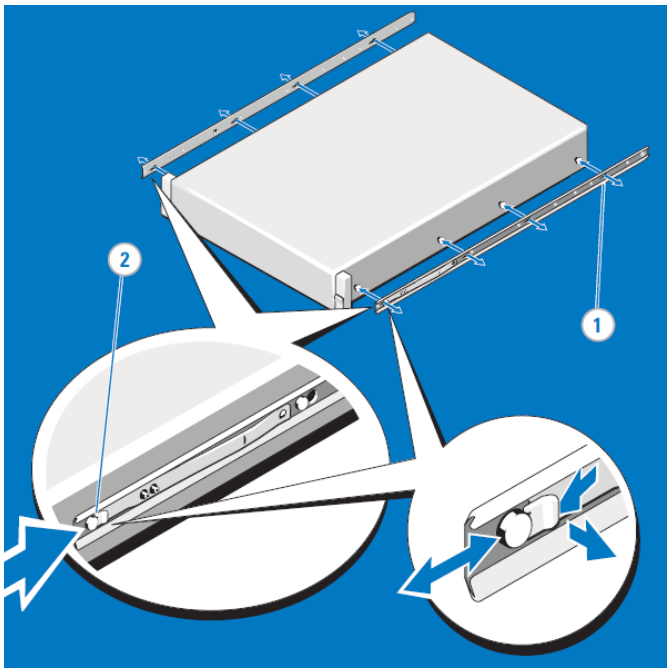

Install the server in the cabinet

This procedures describes installation of the server in the cabinet.

⚠ CAUTION

The server is heavy and should be installed in a cabinet by two people. To avoid personal injury and/or damage to the equipment, do not attempt to install the server in a cabinet without a mechanical lift and/or help from another person.

Procedure

1. Insert the ends of the chassis rails into the front of the rails mounted to the cabinet and push the server into the cabinet (1).
2. Depending on the rail configuration, the latches on the front of the server engage automatically (2). If the latches do not engage automatically, secure the server in the cabinet by tightening the screw under each latch (3).
3. Connect I/O and power cables as described in your system cabling documentation.
4. Thread the Velcro straps through the slots on the back brackets and use the Velcro straps to secure the cables (4).

Note

To remove the server from the cabinet, pull the server out until the travel stops are reached. Locate the blue tabs on the sides of the chassis rails. Push the tabs inward and pull the server until the chassis rails are clear of the rails (5). The travel stop position is intended for repositioning your grip for server removal. It is not intended for service. You must be prepared to support the weight of the server when the chassis rails separate from the cabinet rails

Figure 27 Install the server

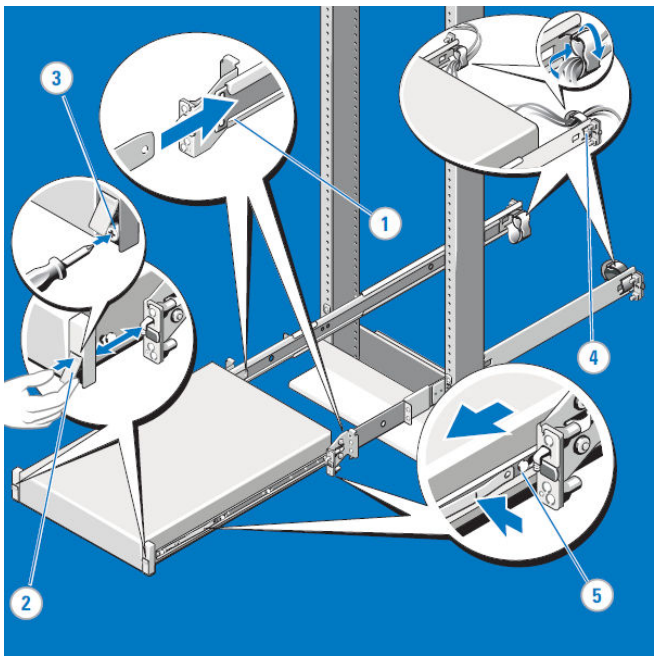

Install the sliding rail assemblies

This procedures describes installation of the sliding rail assemblies in the cabinet.

Procedure

1. Position the left and right rail end pieces labeled FRONT facing inward and orient each end piece to seat in the holes on the front side of the vertical cabinet flanges (1).
2. Align each end piece in the bottom and top holes of the desired U spaces (2).

3. Engage the back end of the rail until it fully seats on the vertical cabinet flange and the latch clicks into place. Repeat these steps to position and seat the front end piece on the vertical cabinet flange (3).

Note

To remove the rails, pull on the latch release button on the end piece midpoint and unseat each rail (4).

Figure 28 Installing sliding rail assemblies

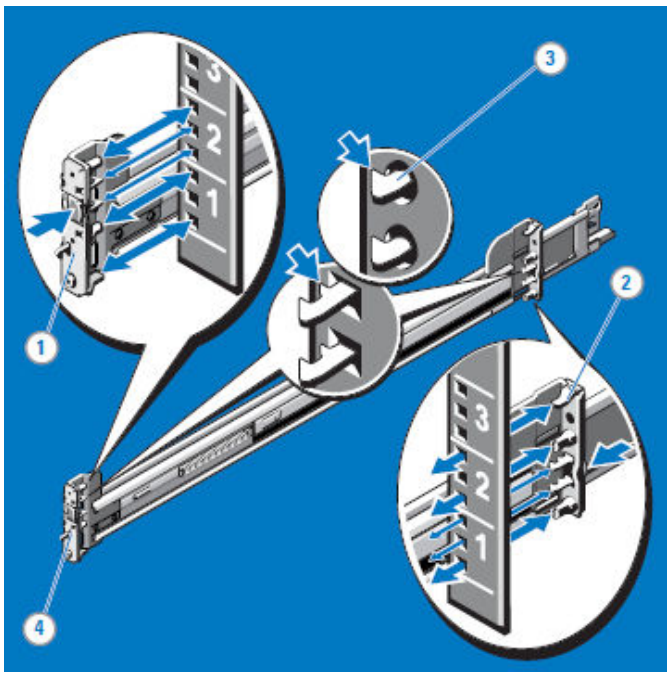

Install the server on sliding rail assemblies

This procedures describes installation of the server on the sliding rail assemblies.

⚠ CAUTION

The server is heavy and should be installed in a cabinet by two people. To avoid personal injury and/or damage to the equipment, do not attempt to install the server in a cabinet without a mechanical lift and/or help from another person.

Procedure

1. Pull the inner slide rails out of the cabinet until they lock into place (1).
2. With the help of second person, position the server above the extended rails.
3. Locate the rear rail standoff on each side of the server and lower them into the rear J-slots on the slide assemblies (2).
4. Rotate the server downward until all the rail standoffs are seated in the J-slots (3).
5. Push the server inward until the lock levers click into place.
6. Press the slide-release lock buttons on both rails (4).

Figure 29 Install server on sliding rail assemblies

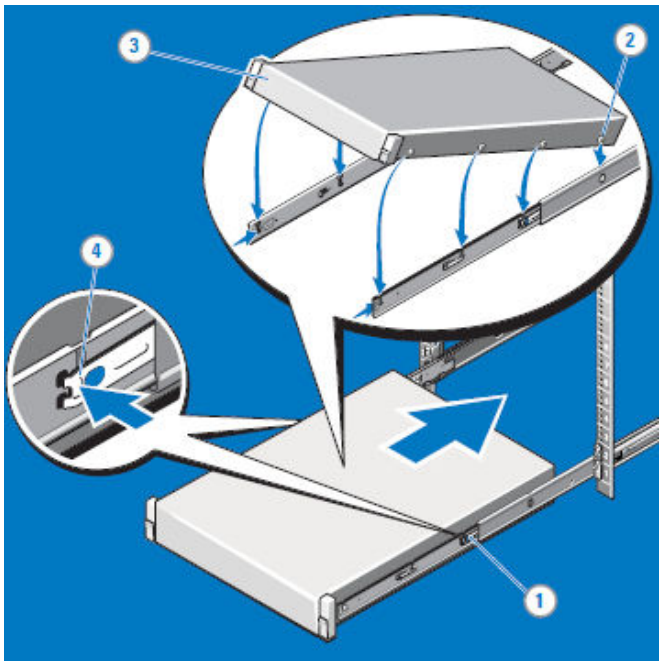

7. Push the server into the cabinet. The slam latch on either side of the server engage automatically as the server is pushed into the cabinet (1).

Note

The slam latches are released by pulling up on the latches (2). To secure the server for unstable environments, locate the hard-mount screw under each latch and tighten each screw with a #2 Phillips screwdriver (3).

Figure 30 Secure the server in the cabinet

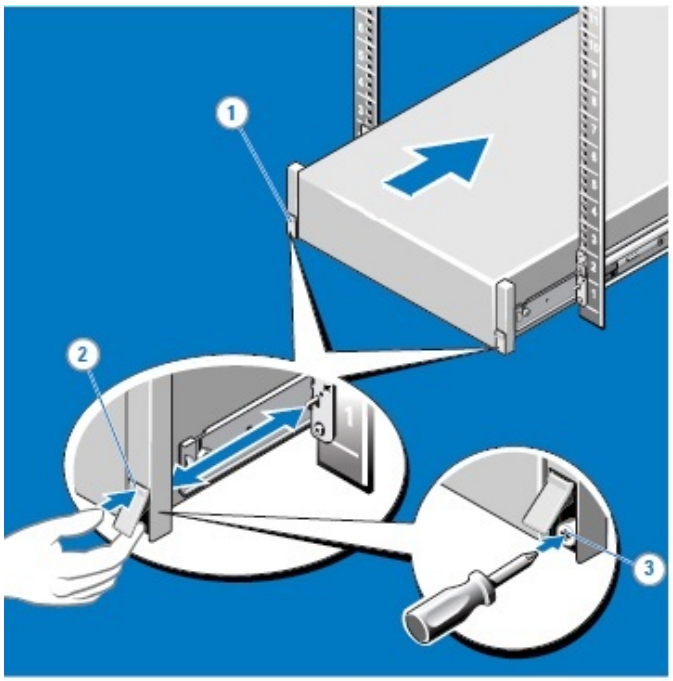

Routing the cables

This procedure describes connecting cables and use of the two hook and loop straps provided in the rail kit to route the cables at the back of the server.

Procedure

1. Connect I/O and power cables as described in your system cabling documentation.
2. Locate the outer CMA brackets on the interior sides of both cabinet flanges (1).
3. Bundle the cables gently, pulling them clear of the server connectors to the left and right sides (2).
4. Thread the hook and loop straps through the tooled slots on the outer CMA brackets on each side of the server to secure the cable bundles (3).

Figure 31 Hook and loop straps

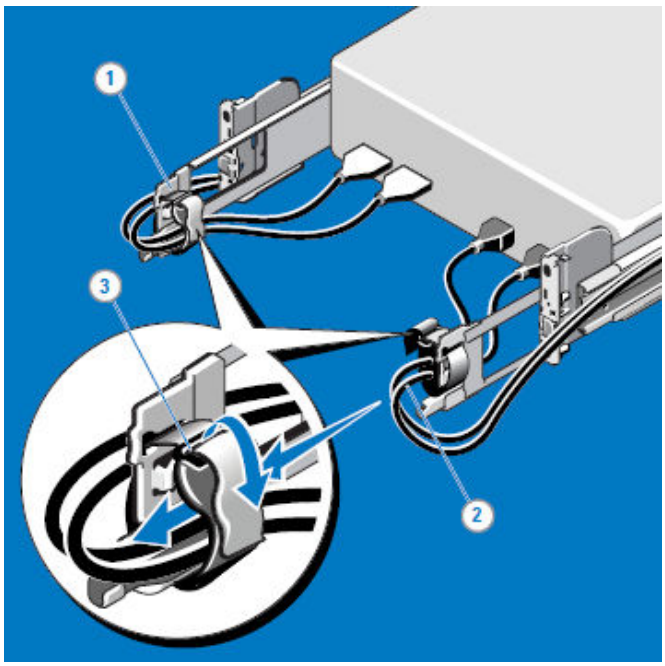

Install bezel

Bezels are application specific, and may not appear as shown. This procedure can be used to install all bezels.

Procedure

1. Position right side of bezel on the server bracket. Rotate the bezel inward so that it is flush with front of the server and the latch on the left side secures the bezel.
2. Lock the bezel with the provided key and store the key in a secure place.

Figure 32 Install the bezel

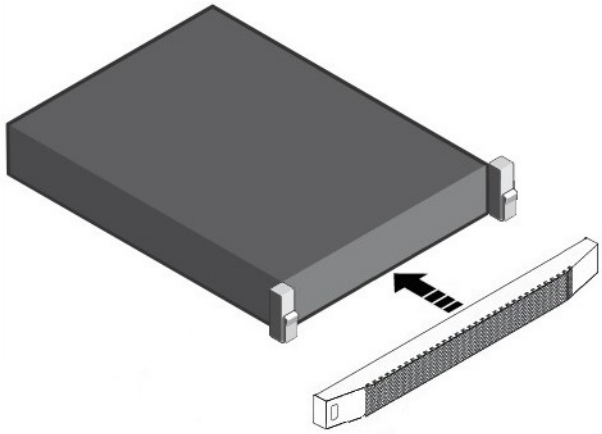

CHAPTER 8

Wiring Diagrams for a 2U1N Configuration

This chapter provides the power, management, and data wiring diagrams for the 2U1N configuration. Topics included:

- Guidelines for wiring a 2U1N configuration 72
- Sample single-phase wiring for 2U1N configuration 73
- Management network wiring for 2U1N configuration 76
- Data network A wiring for 2U1N configuration 78
- Data network B wiring for 2U1N configuration 80

Guidelines for wiring a 2U1N configuration

Use the following figure as reference for connectors on rear panels of the servers and switches:

Figure 33 Power connectors on rear panel of servers and switches

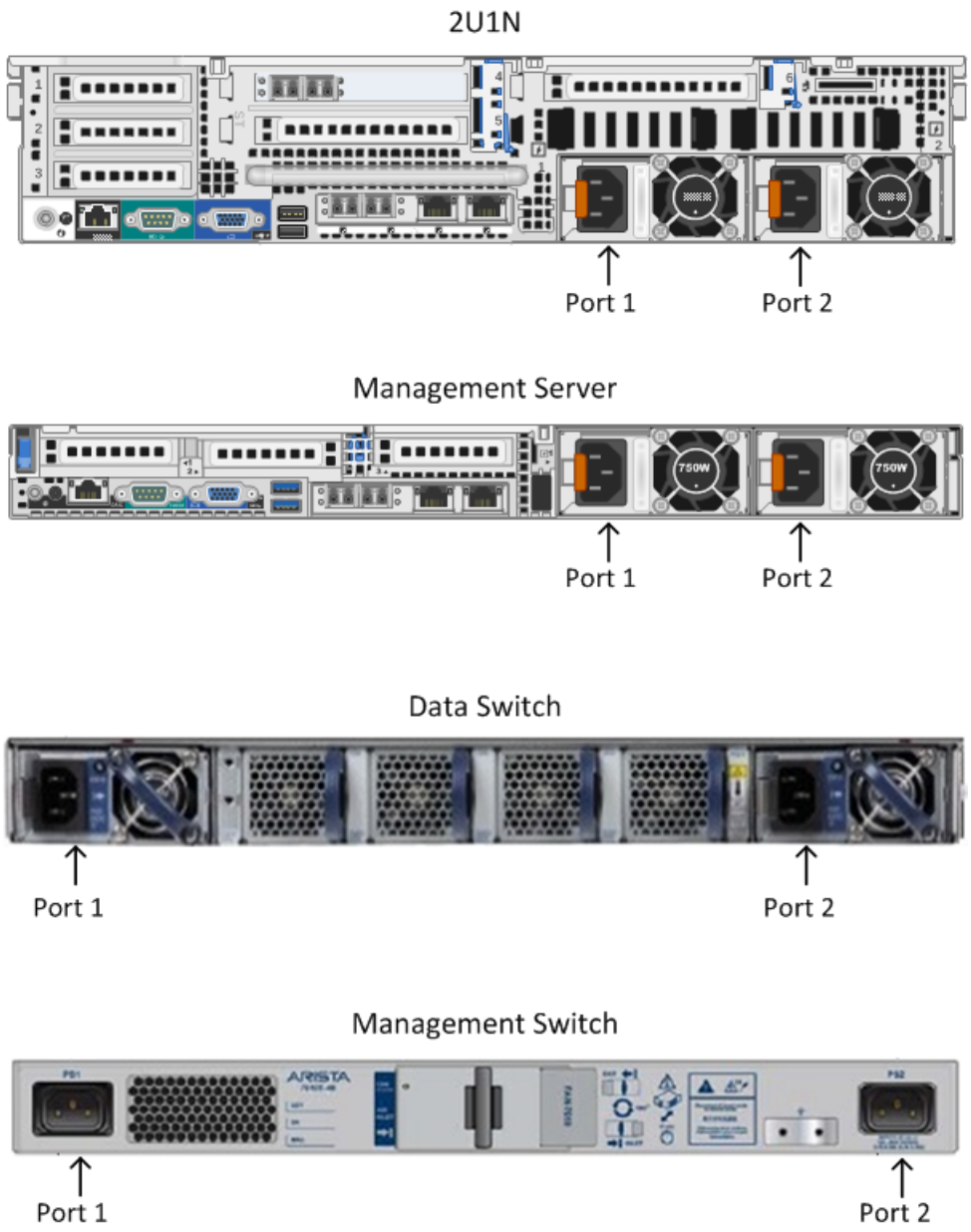

Use the wiring diagrams to connect power, management, and data cables.

As cables are installed and connected, dress and tie cables frequently so that excess slack does not interfere with routing of adjacent cables.

Install and connect cables in the following order:

- Power (typical sample only):Sample single-phase wiring for 2U1N configuration on page 73
- Management Management network wiring for 2U1N configuration on page 76
- Data A Data network A wiring for 2U1N configuration on page 78
- Data B Data network B wiring for 2U1N configuration on page 80

Sample single-phase wiring for 2U1N configuration

This topic provides a sample diagram and a connection table for installing and connecting power cables to power distribution units (PDUs) and the equipment. This information is provided as an example only, and may differ from your system setup, depending on the number of nodes and the type of PDUs used in your system. In this example, PDUs with 14 power inlets are used.

Use the following figure and table to connect power cables in cabinets with single-phase power distribution.

Figure 34 Single-phase power distribution

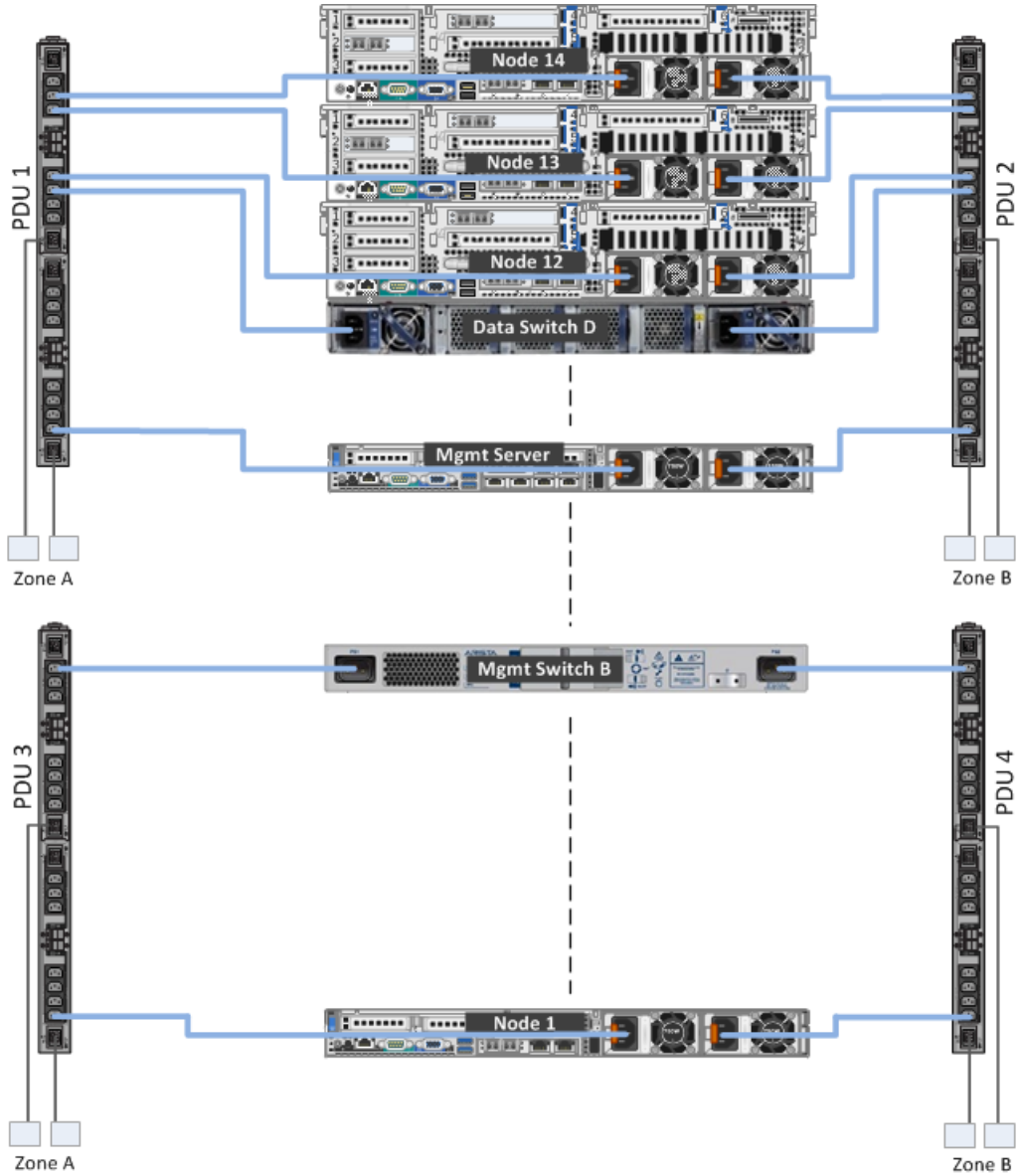

Table 17 Single-phase power distribution cabling

Source	Destination
Node 14 PSU1	PDU 1 Port 2
Node 14 PSU2	PDU 2 Port 2
Node 13 PSU1	PDU 1 Port 3
Node 13 PSU2	PDU 2 Port 3
Node 12 PSU1	PDU 1 Port 4
Node 12 PSU2	PDU 2 Port 4
Data Switch D	PDU 1 Port 5

Table 17 Single-phase power distribution cabling (continued)

Source	Destination
Data Switch D	PDU 2 Port 5
Data Switch C	PDU 1 Port 7
Data Switch C	PDU 2 Port 7
Node 11 PSU1	PDU 1 Port 9
Node 11 PSU2	PDU 2 Port 9
Node 10 PSU1	PDU 1 Port 10
Node 10 PSU2	PDU 2 Port 10
Node 9 PSU1	PDU 1 Port 12
Node 9 PSU2	PDU 2 Port 12
Data Switch B	PDU 1 Port 13
Data Switch B	PDU 2 Port 13
Management Server	PDU 1 Port 14
Management Server	PDU 2 Port 14
Data Switch A	PDU 3 Port 1
Data Switch A	PDU 4 Port 1
Node 8 PSU1	PDU 3 Port 2
Node 8 PSU2	PDU 4 Port 2
Node 7 PSU1	PDU 3 Port 3
Node 7 PSU2	PDU 4 Port 3
Management Switch B	PDU 3 Port 4
Management Switch B	PDU 4 Port 4
Management Switch A	PDU 3 Port 5
Management Switch A	PDU 4 Port 5
Node 6 PSU1	PDU 3 Port 6
Node 6 PSU2	PDU 4 Port 6
Node 5 PSU1	PDU 3 Port 7
Node 5 PSU2	PDU 4 Port 7
Node 4 PSU1	PDU 3 Port 9
Node 4 PSU2	PDU 4 Port 9
Node 3 PSU1	PDU 3 Port 10
Node 3 PSU2	PDU 4 Port 10
Node 2 PSU1	PDU 3 Port 13
Node 2 PSU2	PDU 4 Port 13

Table 17 Single-phase power distribution cabling (continued)

Source	Destination
Node 1 PSU1	PDU 3 Port 14
Node 1 PSU2	PDU 4 Port 14

Management network wiring for 2U1N configuration

Use the following figure and table to connect the management network cables.

Note

The page does not provide enough space to illustrate cabling of the maximum number of nodes in the management network. However, the table does provide all the source to destination cabling for the maximum sized network.

Figure 35 Management network

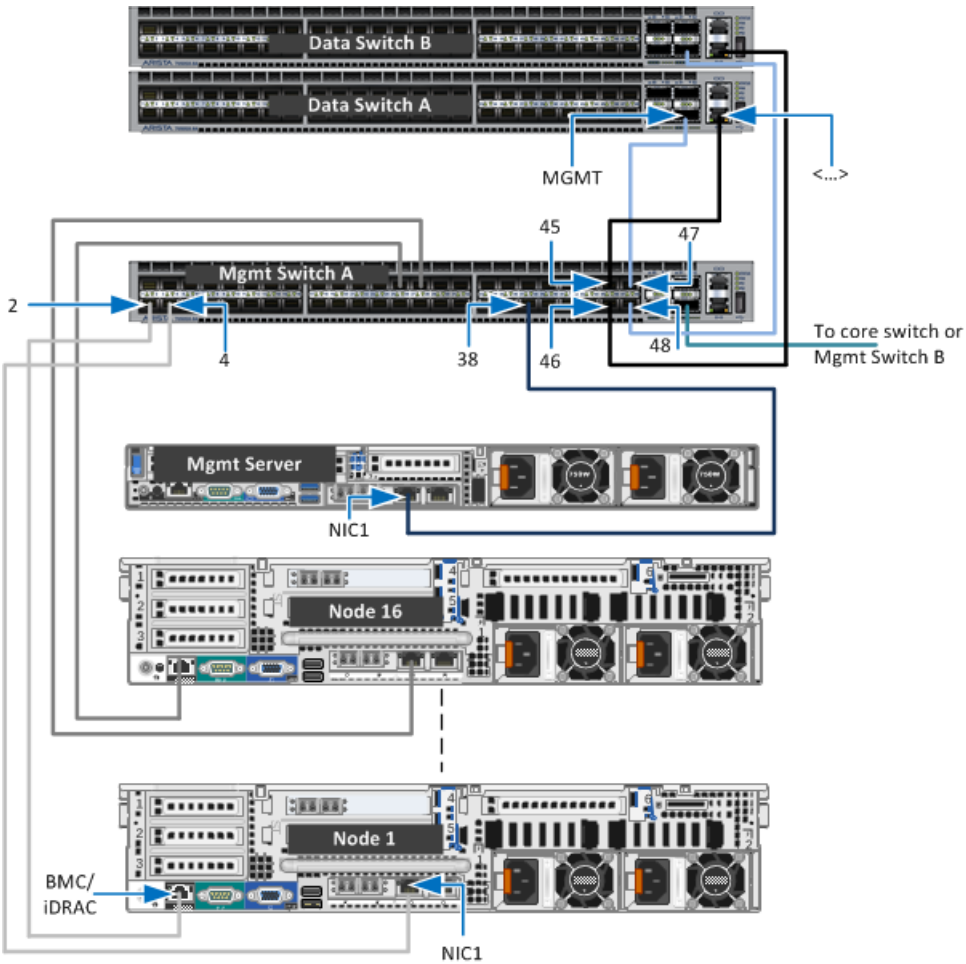

Table 18 Management network cabling

Customer Provided Management Switch	
Source	**Destination**
Node 1 BMC (iDRAC)	Management Switch Port 2
Node 1 NIC 1	Management Switch Port 4
Node 2 BMC (iDRAC)	Management Switch Port 6
Node 2 NIC 1	Management Switch Port 8
Node 3 BMC (iDRAC)	Management Switch Port 10
Node 3 NIC 1	Management Switch Port 12
Node 4 BMC (iDRAC)	Management Switch Port 14
Node 4 NIC 1	Management Switch Port 16
Node 5 BMC (iDRAC)	Management Switch Port 18
Node 5 NIC 1	Management Switch Port 20
Node 6 BMC (iDRAC)	Management Switch Port 22
Node 6 NIC 1	Management Switch Port 24
Node 7 BMC (iDRAC)	Management Switch Port 26
Node 7 NIC 1	Management Switch Port 28
Node 8 BMC (iDRAC)	Management Switch Port 30
Node 8 NIC 1	Management Switch Port 32
Node 9 BMC (iDRAC)	Management Switch Port 34
Node 9 NIC 1	Management Switch Port 36
Node 10 BMC (iDRAC)	Management Switch Port 1
Node 10 NIC 1	Management Switch Port 3
Node 11 BMC (iDRAC)	Management Switch Port 5
Node 11 NIC 1	Management Switch Port 7
Node 12 BMC (iDRAC)	Management Switch Port 9
Node 12 NIC 1	Management Switch Port 11
Node 13 BMC (iDRAC)	Management Switch Port 13
Node 13 NIC 1	Management Switch Port 15
Node 14 BMC (iDRAC)	Management Switch Port 17
Node 14 NIC 1	Management Switch Port 19
Node 15 BMC (iDRAC)	Management Switch Port 21
Node 15 NIC 1	Management Switch Port 23
Node 16 BMC (iDRAC)	Management Switch Port 25
Node 16 NIC 1	Management Switch Port 27

Table 18 Management network cabling (continued)

Customer Provided Management Switch	
Source	**Destination**
Node 17 BMC (iDRAC)	Management Switch Port 29
Node 17 NIC 1	Management Switch Port 31
Data Network Switch A <...> Port	Management Switch Port 45
Data Network Switch B <...> Port	Management Switch Port 46
Data Network Switch A Mgmt Port	Management Switch Port 47
Data Network Switch B Mgmt Port	Management Switch Port 48
Management Server NIC 1	Management Switch Port 38
Link to Core Switch or 2nd Rack Management Switch	Management Switch Port 52

Data network A wiring for 2U1N configuration

Use the following figure and table to connect the data network A cables.

Note

In this example, data switch ports have been intentionally left empty. These empty ports can be used for other user-allocated purposes. If no other use is required for the empty ports, nodes may be connected to the data switches without leaving empty ports. However, ensure that on each node, each NIC is connected to a different data switch (either Data Switch A or Data Switch B), in order to prevent a single point of failure in case a switch fails.

Figure 36 Data networks A and B

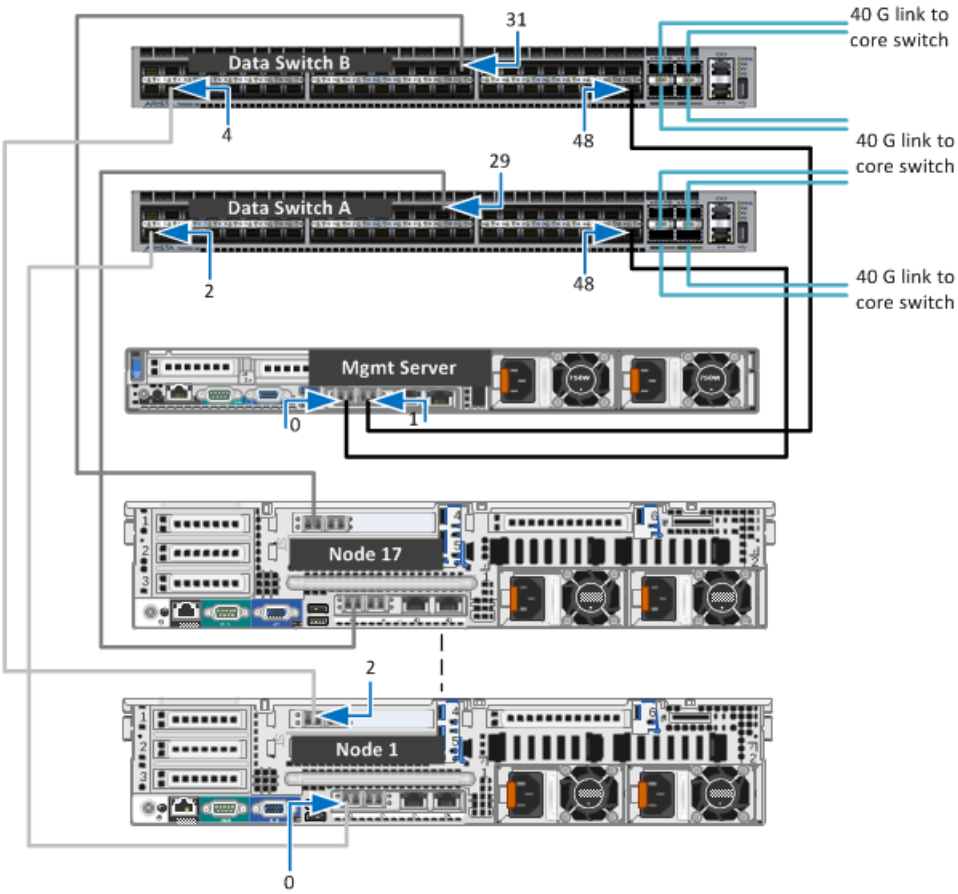

Table 19 Data network A cabling

Data Network A	
Source	Destination
Node 1 Onboard Port 0	Data Network Switch A Port 2
Node 2 Onboard Port 0	Data Network Switch A Port 6
Node 3 Onboard Port 0	Data Network Switch A Port 10
Node 4 Onboard Port 0	Data Network Switch A Port 14
Node 5 Onboard Port 0	Data Network Switch A Port 18
Node 6 Onboard Port 0	Data Network Switch A Port 22
Node 7 Onboard Port 0	Data Network Switch A Port 26
Node 8 Onboard Port 0	Data Network Switch A Port 30
Node 9 Onboard Port 0	Data Network Switch A Port 34
Management Server Port 0	Data Network Switch A Port 48
Node 10 Onboard Port 0	Data Network Switch A Port 1

Table 19 Data network A cabling (continued)

Data Network A	
Node 11 Onboard Port 0	Data Network Switch A Port 5
Node 12 Onboard Port 0	Data Network Switch A Port 9
Node 13 Onboard Port 0	Data Network Switch A Port 13
Node 14 Onboard Port 0	Data Network Switch A Port 17
Node 15 Onboard Port 0	Data Network Switch A Port 21
Node 16 Onboard Port 0	Data Network Switch A Port 25
Node 17 Onboard Port 0	Data Network Switch A Port 29

Data network B wiring for 2U1N configuration

Use the following table to connect the data network B cables.

Table 20 Data network B cabling

Data Network B	
Source	Destination
Node 1 PCIe Port 2	Data Network Switch B Port 4
Node 2 PCIe Port 2	Data Network Switch B Port 8
Node 3 PCIe Port 2	Data Network Switch B Port 12
Node 4 PCIe Port 2	Data Network Switch B Port 16
Node 5 PCIe Port 2	Data Network Switch B Port 20
Node 6 PCIe Port 2	Data Network Switch B Port 24
Node 7 PCIe Port 2	Data Network Switch B Port 28
Node 8 PCIe Port 2	Data Network Switch B Port 32
Node 9 PCIe Port 2	Data Network Switch B Port 36
Management Server Port 1	Data Network Switch B Port 48
Node 10 PCIe Port 2	Data Network Switch B Port 3
Node 11 PCIe Port 2	Data Network Switch B Port 7
Node 12 PCIe Port 2	Data Network Switch B Port 11
Node 13 PCIe Port 2	Data Network Switch B Port 15
Node 14 PCIe Port 2	Data Network Switch B Port 19
Node 15 PCIe Port 2	Data Network Switch B Port 23
Node 16 PCIe Port 2	Data Network Switch B Port 27
Node 17 PCIe Port 2	Data Network Switch B Port 31

CHAPTER 9

Update the Install Database

This chapter provides information to update the install database after all work is completed. The chapter contains the following topic:

- Update the install database 82

Update the install database

After all work is complete, use this procedure to update the install database.

Procedure

1. Open a web browser and navigate to the Dell EMC Business Services website at http://emc.force.com/BusinessServices.
2. In the **Post Sales** area, click **Install Base Group**.
3. Complete and submit the form.