Quick Start Guide

EMC ScaleIO

Version 2.0.x

Deploying ScaleIO on VMware ESXi servers

P/N 302-002-477
REV 05
November 2017

This document provides a quick start to deploying ScaleIO on VMware ESXi servers. Topics include:

- Preface 2
- Before you begin 3
- System requirements 4
- Preparing the environment 7
- DirectPath overview 8
- Registering the vSphere plug-in 9
- Uploading the OVA template 11
- Deploying ScaleIO 11
- Adding devices to an SDS 13
- Log in to the ScaleIO GUI 14

EMC²

Preface

As part of an effort to improve its product lines, EMC periodically releases revisions of its software and hardware. Therefore, some functions described in this document might not be supported by all versions of the software or hardware currently in use. The product release notes provide the most up-to-date information on product features.

Contact your EMC technical support professional if a product does not function properly or does not function as described in this document.

Note

This document was accurate at publication time. Go to EMC Online Support (https://support.emc.com) to ensure that you are using the latest version of this document.

Related documentation

The release notes for your version includes the latest information for your product.

The following EMC publication sets provide information about your ScaleIO or ScaleIO Ready Node product:

- ScaleIO software (downloadable as ScaleIO Software <version> Documentation set)
- ScaleIO Ready Node with AMS (downloadable as ScaleIO Ready Node with AMS Documentation set)
- ScaleIO Ready Node no AMS (downloadable as ScaleIO Ready Node no AMS Documentation set)
- VxRack Node 100 Series (downloadable as VxRack Node 100 Series Documentation set)

You can download the release notes, the document sets, and other related documentation from EMC Online Support.

Typographical conventions

EMC uses the following type style conventions in this document:

Bold	Used for names of interface elements, such as names of windows, dialog boxes, buttons, fields, tab names, key names, and menu paths (what the user specifically selects or clicks)
Italic	Used for full titles of publications referenced in text
`Monospace`	Used for: • System code • System output, such as an error message or script • Pathnames, filenames, prompts, and syntax • Commands and options
Monospace italic	Used for variables
`Monospace bold`	Used for user input
[ ]	Square brackets enclose optional values
|	Vertical bar indicates alternate selections - the bar means “or”

{ }	Braces enclose content that the user must specify, such as x or y or z
...	Ellipses indicate nonessential information omitted from the example

Where to get help

EMC support, product, and licensing information can be obtained as follows:

Product information

For documentation, release notes, software updates, or information about EMC products, go to EMC Online Support at https://support.emc.com.

Technical support

Go to EMC Online Support and click Service Center. You will see several options for contacting EMC Technical Support. Note that to open a service request, you must have a valid support agreement. Contact your EMC sales representative for details about obtaining a valid support agreement or with questions about your account.

Your comments

Your suggestions will help us continue to improve the accuracy, organization, and overall quality of the user publications. Send your opinions of this document to techpubcomments@emc.com.

Before you begin

This document describes how to deploy ScaleIO on an ESXi server.

The procedures in the document apply to ScaleIO deployment in the following scenario:

- all management and data communication are on the same network
- one Protection Domain
- on a fully-converged system

For all other cases and customization options, use the full installation, as described in the *ScaleIO Deployment Guide*. ScaleIO can be deployed in 3-node or 5-node MDM cluster mode. This document supports both modes.

Before deploying ScaleIO, read this document in its entirety.

Note

ScaleIO installation enables unlimited use of the product, in non-production environments. To obtain a license for production use, and to receive technical support, open a service ticket with Customer Support at https://support.emc.com.

Deployment step overview:

1. Prepare the environment.
2. Register the plug-in.
3. Upload the OVA template.
4. Deploy ScaleIO.

System requirements

This section lists the requirements for system components.

This section is specific to ScaleIO software deployments.

For ScaleIO Ready Node or VxRack Node 100 Series systems, refer to your product's Hardware Configuration and Operating System Installation Guide.

ScaleIO cluster components

List of required ScaleIO servers.

- ScaleIO component servers:
  - 3-node cluster
    - One Master MDM
    - One Slave MDM
    - One Tie Breaker
    - Minimum of three SDSs (on the same servers as the above components, or on three different servers)
    - SDCs, up to the maximum allowed (on the same servers as the above components, or on different servers)
  - 5-node cluster
    - One Master MDM
    - Two Slave MDMs
    - Two Tie Breakers
    - Minimum of three SDSs (on the same servers as the above components, or on three different servers)
    - SDCs, up to the maximum allowed (on the same servers as the above components, or on different servers)
- ScaleIO Gateway server on a separate server, or together with an MDM or SDS. Do not install the Gateway on an SDC server or on an SDS on which RFcache will be enabled.

Physical server requirements

Table 1 Server physical requirements

Component	Requirement
Processor	One of the following: • Intel or AMD x86 64-bit (recommended) • Intel or AMD x86 32-bit (for Xen only)
Physical memory	ScaleIO component requirements: • 500 MB RAM for the Meta Data Manager (MDM) • 500 MB RAM for each ScaleIO Data Server (SDS)

Table 1 Server physical requirements (continued)

Component	Requirement
	• 50 MB RAM for each ScaleIO Data Client (SDC) DAS Cache memory requirements (ScaleIO Ready Node, non-XenServers only). Add to every SVM/node that will be using DAS Cache: • 1U1N servers—500 MB RAM • 2U1N servers—1 GB RAM To calculate SVM memory allocation, use the formulas provided in the *ScaleIO Deployment Guide*.
Disk space	• 10 GB for VMware topologies

Connectivity	One of the following:
	• 1 GbE or 10 GbE (recommended) network
	• IP-over-InfiniBand network
	Dual-port network interface cards (recommended)
	Ensure the following:
	• There is network connectivity between all components.
	• Network bandwidth and latency between all nodes is acceptable, according to application demands.
	• Ethernet switch supports the bandwidth between network nodes.
	• MTU settings are consistent across all servers and switches.
	• The following TCP ports are not used by any other application, and are open in the local firewall of the server:
	  ▪ MDM: 6611 and 9011
	  ▪ Tie Breaker: 9011
	  ▪ SDS: 7072. Multiple SDS (not supported on Windows): 7073-7076
	  ▪ Light Installation Agent (LIA): 9099
	  ▪ SDBG ports (used by ScaleIO internal debugging tools to extract live information from the system): MDM 25620, SDS 25640. Multiple SDS (not supported on Windows): 25641-25644 (not 25640).
	• The following UDP port is open in the local firewall of the server:
	  ▪ SNMP traps: 162
	Note
	You can change the default ports. For more information, see “Changing default ports” in the user documentation.

Supported operating systems

The list of operating systems supported by this version of ScaleIO.

For the most updated list, see the EMC Simple Support Matrix (ESSM) at https://elabnavigator.emc.com/eln/elnhome.

Table 2 Supported operating systems - ScaleIO components

Operating system	Requirement
Hypervisors	• VMware ESXi OS: 5.5 U3, 6.0 U3, or 6.5, managed by vCenter 5.5 or 6.0

GUI server requirements

Component	Requirement
Supported operating systems	Windows 7, 2008 R2, 10, 2012 or 2012 R2, 2016 (in v2.0.1.1 and later). Server Core editions are not supported.
Other	• Java 1.8 64-bit or later • Screen resolution: 1366 x 768 minimum

ScaleIO Gateway server requirements

Component	Requirement

Supported operating systems	• Windows 2008 R2, 2012 R2, or 2016, including the Visual C++ redistributable 2010 package, 64-bit. Server Core editions are not supported.
	• Linux:
	  ▪ CentOS 6.x-7.x
	  ▪ Oracle Linux 6.5/7.x
	  ▪ Red Hat 6.x-7.x
	  ▪ SUSE 11.3, 12, 12.1, and 12.2
	  ▪ Ubuntu 14.04, Ubuntu 16.04
	Every server requires 2 cores and a minimum of 3 GB available RAM.

Connectivity	The following TCP ports are not used by any other application, and are open in the local firewall of the server: 80 and 443 (or 8080 and 8443). You can change the default ports. For more information, see “Changing default ports” in the user documentation.
Supported web browsers	• Internet Explorer 10, or later • Firefox, version 42, or later • Chrome, version 45, or later
Java requirements	• 1.8 or later, 64-bit
Other	• For a Windows Gateway, the Windows Management Instrumentation service must be enabled on the IM server and on all Windows ScaleIO nodes. • Do not install the Gateway on a server on which RFcache will be enabled or on which SDC will be installed.

Component	Requirement
	• The Gateway server must have connectivity to all the nodes that are being installed. If you are using separate networks for management and data, the server must be able to communicate with both networks.

Other requirements

ScaleIO requires that you use a minimum of three SDS servers, with a combined free capacity of at least 300 GB. These minimum values are true per system and per Storage Pool.

NOTICE

ScaleIO installation enables unlimited use of the product, in non-production environments . To obtain a license for production use, and to receive technical support, open a service ticket with Customer Support at https://support.emc.com.

For complete information on licensing, see the *ScaleIO User Guide*.

Preparing the environment

This topic describes how to prepare the environment before deploying ScaleIO.

Before deploying on VMware ESX servers, ensure that your environment meets the following requirements:

- A minimum of 3 devices to add to SDS, that all meet the following prerequisites:
  - A minimum of 100 GB available storage capacity
  - The devices must be free of partitions.
  - If a device has a VMFS volume on it, you can use a VMDK instead of a raw device, with a small degradation. Before adding the device, you must use the plug-in **Advanced settings** option to enable VMDK creation.
- All ESX hosts selected to have either an MDM, Tie-Breaker, or SDS component installed on them, must have a defined local datastore, with a minimum of 10 GB free space (to be used for the SVM). If the ESX is only being used as an SDC, there is no need for this datastore.
- The management network must have the following items configured:
  - VMKernel Port (necessary only if using a single network)
  - Virtual Machine Port Group (the name must be identical on all of the ESX hosts)

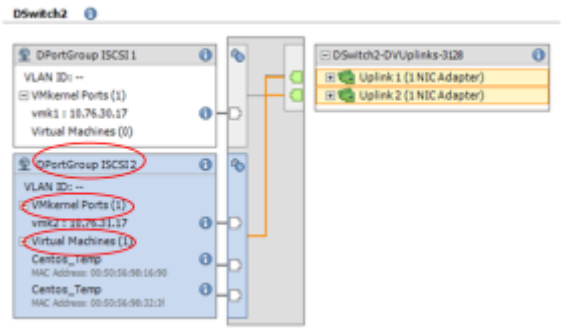

- When using distributed switches, the distributed switch must have the following items configured:
  - VMKernel port (necessary only if using a single network) on regular vswitch (required only for uploading the SVM OVA using the registration script and can be created without any physical interface)
  - dvPortGroup (distributed switch port group) for virtual machines

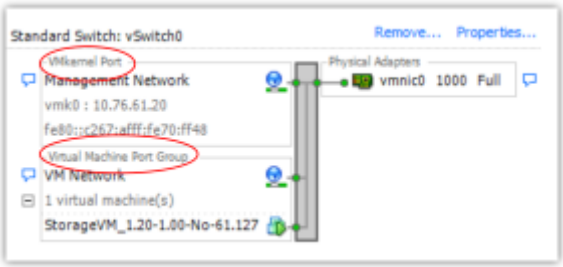

- The host from which you run the PowerShell (.ps1) script must meet the following prerequisites:
  - Runs on supported Windows OS
  - PowerCLI is installed
  - Java 1.8 is installed
  - Has incoming and outgoing communication access to the vCenter
- The vSphere web client (Virgo) server must have network connectivity to the host on which the PowerShell script will be used.

DirectPath overview

Implementing a VMware DirectPath I/O-based system has different requirements and some changes in the deployment flow.

Prerequisites

- When DirectPath is configured, all servers in the system must use DirectPath. For ScaleIO Ready Node or VxRack Node 100 Series systems, this can be configured with the ScaleIO vSphere plug-in. For other servers, use the vSphere Web Client to configure each ESXi host manually.
- The vCenter with the vSphere plug-in used to configure DirectPath must not be hosted on the ESXi on which DirectPath is being configured. The process requires the host to enter maintenance mode, which is not possible in this scenario (as VMs must be powered off before a host can enter maintenance mode).

- Devices to be added to SDS on all servers must not have any other use (not VMDK, RDM, or be part of a datastore).
- Before using the vSphere plug-in to add devices, ensure that the devices have VD names. To add unnamed devices, use the SCLI `add_sds` command. For more information, see the "Add SDS device with vSphere plug-in fails in DirectPath environment" troubleshooting section in the *ScaleIO User Guide*.
- PowerEdge 14G servers with any NVME devices cannot be added in a DirectPath-based system. Use RDM-based, instead.
- ESXi boot device requirements:
  - Must be on a separate controller or connected directly to the board.
  - For 13G servers, SATADOM and M2 boot devices are supported. For 14G servers, M2 and BOSS boot devices are supported.
    These devices allow the creation of a datastore on the system disk, which is needed to host the ScaleIO VM.
  - USB boot devices are not supported.

The following sections briefly list the changes required to configure and enable DirectPath. These changes are described in full, later in the document.

Before deployment

- Configure the ESXi hosts for DirectPath. This step requires an ESXi server restart. For ScaleIO Ready Node or VxRack Node 100 Series servers, select **Configure DirectPath** in the **Pre-deployment actions** option of the ScaleIO vSphere plug-in.

During deployment

- In the **Add ESX hosts to cluster** stage, select **Set up a DirectPath-based system** during the deployment. The ESXi hosts that you can add are limited to those on which DirectPath was previously configured.
- Devices are added after the deployment, not in the **Add SDSs** stage.
  Why can't devices be added now?

  Once DirectPath was enabled on the ESXi servers (before deployment), the devices are not visible to the servers anymore. In addition, the ScaleIO VM (SVM) is not deployed yet, thus devices cannot be added to it yet.
- Set the Total Planned Capacity per SVM (default 8 GB).
  How does adding devices later affect the SVM memory?

  The calculation of SVM memory is affected by the device capacity. You should set a total planned capacity, to enable future expansion without requiring a maintenance window.

After deployment

- Add devices to SDS.

Registering the vSphere plug-in

Use PowerCLI to register the ScaleIO vSphere plug-in on a vCenter.

Before you begin

Before you begin:

- Ensure that there is communication between the vSphere web client server (usually installed on the vCenter) and the web server storing the plug-in.

- Obtain the vCenter credentials.

Procedure

1. Prepare the files:
   a. From the Online Support site (https://support.emc.com), download and extract the `ScaleIOVMware Software Download` for this version.
   b. From the extracted files, copy the following files to your designated host:
      - `ScaleIOVM_2nics_2.0.14000.xxx.ova`
      - `EMC-ScaleIO-vSphere-plugin-installer-2.0-14000.xxx.zip`
   c. Extract the contents of the zip file.
2. With PowerCLI for VMware, set to Run as administrator, run the following script:

```
ScaleIOPluginSetup-2.0-14000.X.ps1
```

   a. Type the vCenter name or IP address, username, and password.
   b. For **Choose Mode**, select option **1, Register ScaleIO plug-in**.
   c. Read the upgrade notice, and type `y` to continue.
   d. For registration, select either **Standard** (simplified, using embedded Tomcat), or **Advanced** (to use an external web server or previously installed ScaleIO gateway).
   e. Accept the thumbprint (if required).
3. Log in to the vSphere web client.

   If you are already logged in, log out, then log in again.
4. Return to the PowerCLI window, and press ENTER to return to the script menu and complete the plug-in installation.
5. From the vSphere **Home** tab, verify that the ScaleIO icon

is visible in the **Inventories** section.

Results

The plug-in is registered. If the ScaleIO icon is missing, the vSphere web client server failed to register the plug-in, due to one of the following reasons:

- Connectivity problem between the vSphere web client server and the web server storing the plug-in (for example, network / firewall etc.). Resolution: Verify that there is communication between the vSphere web client server and the web server storing the plug-in
- URL problem when using an external web server. Resolution: Verify that the URL is https:// and is pointing to the correct web server IP address (ScaleIO Gateway).

Uploading the OVA template

This topic describes how to upload the ScaleIO OVA template

Procedure

1. Return to the PowerCLI window, and from the script menu, select the option **3, Create SVM template**.
2. Enter the following parameters:
   - Data center name
   - Path to the OVA, including the OVA file name
   - Datastore names

   Note

   For faster, parallel, deployment in large-scale environments, you can use the OVA to create SVM templates on as many as eight datastores. To do so, enter the datastore names, and when done, leave the next line blank, and press ENTER. The following example shows how to enter two datastores:

   ```
   datastores[0]: datastore1
   datastores[1]: datastore1 (1)
   datastores[2]:
   ```

   (For best results, enter a local (not shared) datastore for each ESX server.)

   The upload procedure may take several minutes. When complete, a message similar to the following will appear for each template: `The template EMC ScaleIO SVM Template (v2.0.13000.xxx) was successfully created`
3. When the process is complete, enter `4` to exit the script.

Deploying ScaleIO

Use the ScaleIO vSphere plug-in deployment wizard to deploy ScaleIO.

Procedure

1. Prepare the ESX hosts:
   a. Log in to the vSphere web client.
   b. Open the **ScaleIO** screen by clicking the **EMC SIO** icon.
   c. From the **Basic Tasks** section of the **ScaleIO** screen, click **Pre-Deployment Actions**.

      The **Pre-Deployment Actions** screen appears.
   d. Drill-down on the vCenter to display connected ESX hosts.
   e. For every ESX host that might be part of this ScaleIO system (even if only in the future):
      a. Select **Install SDC**.

b. To configure DirectPath (optional), select **Configure DirectPath**. (This step selects the Install SDC, too.)

c. Do not select **Convert ISO**. This feature is in preparation for a future release of ScaleIO Ready Node.

d. Type **ESX Root Password**.

f. Click **Run**.

The status appears in the dialog.

g. When finished, click **Finish**.

h. You must restart the ESX hosts before proceeding.

2. When using all-SSD chassis (in an RDM or VMDK-based system), perform this step; otherwise, go to the next step.

   Sometimes the ESX nodes in an all-SSD chassis do not identify the node disks as Standard Parallel SCSI devices. If so, you must enable the **RDMs on non Parallel SCSI Controllers** option.

   a. In the **EMC ScaleIO** screen, click **Advanced Settings** to display the settings options.

   b. Select the **Enable RDMs on non Parallel SCSI Controller** option and click **OK**.

   c. Go to the next step.

3. From the **EMC ScaleIO** screen, click **Deploy ScaleIO Environment**.

   The deployment wizard begins.

4. Use the deployment wizard to deploy ScaleIO in the VMware environment.

   For a DirectPath-based system, in the **Add ESX hosts to cluster** stage, select **Set up a DirectPath-based system**. In the **Add SDSs** stage, devices will not be added.

   For a full description of all deployment options, see the *ScaleIO Deployment Guide*.

5. After the deployment wizard is complete, to enable autostart, perform the following:

   This step is not necessary if the VMware HA feature is enabled.

   a. Click the ESX **Configuration** tab.

   b. From the **Software** section, click **Virtual Machine Startup/Shutdown**.

   c. Click **Properties** and in the dialog box, select **Allow virtual machines to start and stop automatically with the system**.

   d. Click **OK**.

   e. Repeat this process for all ESX hosts.

After you finish

In a DirectPath-based system, add devices to the SDSs.

Adding devices to an SDS

Use the vSphere plug-in to add devices to an SDS in a ScaleIO system.

In an RDM/VMDK-based ScaleIO system, you can add devices during and after the deployment. In a DirectPath-based system, you add devices only after the deployment.
You can add devices to a single SDS or to all SDSs in the system. The first option is quicker, but is limited to one SDS at a time.

All data on added devices will be erased.

Before using the vSphere plug-in to add devices, ensure that the devices have VD names. To add unnamed devices, use the SCLI `add_sds` command. For more information, see the "Add SDS device with vSphere plug-in fails in DirectPath environment" troubleshooting section in the *ScaleIO User Guide*.

Note

If you intend to enable zero padding on a Storage Pool, you must do so before you add any devices to the Storage Pool.

Procedure

1. From the SDSs screen of the ScaleIO vSphere plug-in, select one of the following:
   - Right-click a specific SDS, then select **Add devices to a single SDS**.
   - Right-click any SDS, then select **Add devices to ScaleIO system**.

   The **Add Device** dialog appears. All devices that can be attached to the selected SDS are listed. For the system view, all SDSs are listed, and you can choose devices to add for each SDS. It may take a few moments to load the list of devices from the vCenter.
2. Add devices:
   - One-at-a-time:
     a. Select whether the device should be used for storage or to provide acceleration.
     b. Select the Storage Pool to which the devices should be assigned.
     c. To enable the use of devices that may have been part of a previous ScaleIO system. select **Allow the take over of devices with existing signature**.
     d. Click **OK**.
   - All devices on a server at once:
     a. Click **Select all devices**.
     b. Select whether to use the devices for storage or to provide acceleration.
     c. Select the Storage Pool to which the devices should be assigned.
     d. To enable the use of devices that may have been part of a previous ScaleIO system. select **Allow the take over of devices with existing signature**.
     e. Click **Assign**.

3. Confirm the action, by typing the ScaleIO password.
4. When the add operation is complete, click **Close**.

Results

The devices are added.

Log in to the ScaleIO GUI

Open and log in to the ScaleIO GUI.

Before you begin

Ensure that:

- The GUI software is installed on the workstation. To install the GUI, see "Installing the ScaleIO GUI."
- You have these credentials (available from the administrator):
  - MDM management IP address or hostname
  - Username (default: admin)
  - Password (defined during deployment)

Procedure

1. Open the GUI by selecting **Start** > **All Programs** > **ScaleIO GUI**.

   The initial login screen is displayed.
2. Type the IP address or hostname and click **Connect**.

   If a certificate notice is displayed, review and accept the certificate.

   If a login banner is displayed, confirm it to continue.
3. In the login screen, type the username and password, and click **Login**.

Results

The ScaleIO GUI is displayed.

After you finish

Users and passwords are configured with the ScaleIO CLI. For more information, see the "Security" chapter of the *ScaleIO User Guide*.

Copyright © 2016-2017 EMC Corporation All rights reserved.

Published November 2017

Dell believes the information in this publication is accurate as of its publication date. The information is subject to change without notice.

THE INFORMATION IN THIS PUBLICATION IS PROVIDED "AS-IS." DELL MAKES NO REPRESENTATIONS OR WARRANTIES OF ANY KIND WITH RESPECT TO THE INFORMATION IN THIS PUBLICATION, AND SPECIFICALLY DISCLAIMS IMPLIED WARRANTIES OF MERCHANTABILITY OR FITNESS FOR A PARTICULAR PURPOSE. USE, COPYING, AND DISTRIBUTION OF ANY DELL SOFTWARE DESCRIBED IN THIS PUBLICATION REQUIRES AN APPLICABLE SOFTWARE LICENSE.

Dell, EMC, and other trademarks are trademarks of Dell Inc. or its subsidiaries. Other trademarks may be the property of their respective owners. Published in the USA.