EMC® AVAMAR®

DATA STORE
GEN4

SINGLE NODE CUSTOMER INSTALLATION GUIDE

P/N 300-011-545
REV 06

EMC CORPORATION
CORPORATE HEADQUARTERS:
HOPKINTON, MA 01748-9103
1-508-435-1000
www.EMC.com

Copyright and Trademark Notices

Copyright © 2002 - 2012 EMC Corporation. All rights reserved.

Published August, 2012

EMC believes the information in this publication is accurate as of its publication date. The information is subject to change without notice.

THE INFORMATION IN THIS PUBLICATION IS PROVIDED "AS IS." EMC CORPORATION MAKES NO REPRESENTATIONS OR WARRANTIES OF ANY KIND WITH RESPECT TO THE INFORMATION IN THIS PUBLICATION, AND SPECIFICALLY DISCLAIMS IMPLIED WARRANTIES OF MERCHANTABILITY OR FITNESS FOR A PARTICULAR PURPOSE.

Use, copying, and distribution of any EMC software described in this publication requires an applicable software license.

For the most up-to-date listing of EMC product names, see EMC Corporation Trademarks on EMC.com.

All other trademarks used herein are the property of their respective owners.

TABLE OF CONTENTS

Foreword 5
Revision history 5
Scope and intended audience 5
Product information 7
Where to get help 7
Documentation 7
Knowledgebase 7
Live chat 8
Service Requests 8
Facilitating support 8
Your comments 8
Typographic conventions 9
Safety admonitions and notices 9

General Information 11
Important terms and concepts 11
Information for EMC customers 15
Fundamental Avamar Principles 16
Avamar v6.x installation features overview 16
How long will the installation take? 16
AvInstaller Program 17
Process flow 18
Log files 19
In-flight encryption 19
Avamar Downloader Service 19

Installation Prerequisites 21
Site, environmental requirements 21
Tools, equipment, software, data requirements 22
Hardware Specifications 23

System Preparation 25
Prepare the system for Avamar software installation 25
Prepare the single node server for software installation 26

Avamar Data Store Networking 34
Overview 34
Basic networking configuration 35

Network configurations supported by ADS Gen4 35
Single uplink to your network 36
Dual uplink to your network 36
Dual uplink plus options to your network 37
dpnnetutil advanced configuration 38
Features 38
ADS Gen4 replication 39
Basic Replication 39
Dedicated Replication 40
Accelerator node configuration 44

Appendix A — Mounting Avamar Single Node Server 52
Recommended tools and supplies 52
Universal, Telco rail kits 53
Universal rail kits 53
Telco rack installations 54
ADS Gen4 hardware 55
7.8 TB capacity node 55
1.3 TB, 2.6 TB, and 3.9 TB capacity nodes 58
Accelerator nodes 60
ADS Gen4 network switches 60
Installation for 1.3 TB, 2.6 TB, and 3.9 TB capacity nodes 62
Installation for 7.8 TB capacity nodes 66
Installing and dressing power cords and Ethernet cables 71
Installing ADS Gen4 network switches 72

FOREWORD

Revision history

The *Avamar Data Store Gen4 Single Node Customer Installation Guide* was originally published in April 2011.

REVISION	DATE	DESCRIPTION
06	August 31, 2012	Repaired missing images.
05	July 31, 2012	Updated *Where to get help* (page 7).
A04	July 24, 2012	Updated Avamar Downloader Service information.
A03	Apri 30, 2012	Various minor updates.
A02	June 30, 2011	Multiple minor corrections in System Installation chapter.
A01	April 30, 2011	Original publication date.

Scope and intended audience

Scope. This publication describes how to configure and install a new Avamar Data Store Gen4 single node server. Implementation is typically performed remotely by EMC personnel.

Intended Audience. The information in this publication is primarily intended for persons responsible for configuring and installing Avamar Data Store Gen4. Installation in this context is the physical rack and stack, power, cable, and initial network configuration required to facilitate software implementation done by EMC remote personnel or an authorized partner.

IMPORTANT: Persons using this publication must be sufficiently familiar with Avamar Data Store Gen4 nodes so that they can correctly configure the hardware according to the guidelines and requirements supplied in this publication.

IMPORTANT: This guide is strictly for use with Avamar Data Store Gen4 single node systems.

To install the Avamar server software on any supported third-party hardware platforms, use the instructions in the *Avamar 6.x Server Software Installation Guide*, which can be found on EMC Online Support at http://support.EMC.com.

Product information

For current documentation, release notes, software updates, information about EMC products, licensing, and service, go to the EMC Online Support website at http://support.EMC.com.

Where to get help

The Avamar support page provides access to licensing information, product documentation, advisories, and downloads, as well as how-to and troubleshooting information. This information may enable you to resolve a product issue before you contact EMC Customer Service.

To access the Avamar support page:

1. Go to https://support.EMC.com/products.
2. Type a product name in the **Find a Product** box.
3. Select the product from the list that appears.
4. Click the arrow next to the **Find a Product** box.
5. (Optional) Add the product to the **My Products** list by clicking **Add to my products** in the top right corner of the **Support by Product** page.

Documentation

The Avamar product documentation provides a comprehensive set of feature overview, operational task, and technical reference information. Review the following documents in addition to product administration and user guides:

- Release notes provide an overview of new features and known limitations for a release.
- Technical notes provide technical details about specific product features, including step-by-step tasks, where necessary.
- White papers provide an in-depth technical perspective of a product or products as applied to critical business issues or requirements.

Knowledgebase

The EMC Knowledgebase contains applicable solutions that you can search for either by solution number (for example, esgxxxxxx) or by keyword.

To search the EMC Knowledgebase:

1. Click the **Search** link at the top of the page.
2. Type either the solution number or keywords in the search box.
3. (Optional) Limit the search to specific products by typing a product name in the **Scope by product** box and then selecting the product from the list that appears.
4. Select **Knowledgebase** from the **Scope by resource** list.

5. (Optional) Specify advanced options by clicking **Advanced options** and specifying values in the available fields.
6. Click the search button.

Live chat

To engage EMC Customer Service by using live interactive chat, click Join Live Chat on the Service Center panel of the Avamar support page.

Service Requests

For in-depth help from EMC Customer Service, submit a service request by clicking Create Service Requests on the Service Center panel of the Avamar support page.

> **NOTE:** To open a service request, you must have a valid support agreement. Contact your EMC sales representative for details about obtaining a valid support agreement or with questions about your account.

To review an open service request, click the Service Center link on the Service Center panel, and then click View and manage service requests.

Facilitating support

EMC recommends that you enable ConnectEMC and Email Home on all Avamar systems:

- ConnectEMC automatically generates service requests for high priority events.
- Email Home emails configuration, capacity, and general system information to EMC Customer Service.

Your comments

Your suggestions will help us continue to improve the accuracy, organization, and overall quality of our documentation. You may email comments to:

`BSGDocumentation@EMC.com`

Please include the following information:

- Product name and version
- Document name, part number, and revision (for example, A01)
- Page numbers
- Other details that will help us address the documentation issue

Typographic conventions

The following table provides examples of standard typographic styles used in this guide to convey various kinds of information.

EXAMPLE	DESCRIPTION
Click **OK**. or Select **File > Close**.	Bold text denotes actual buttons, commands, menus, and options that initiate action. Sequential commands are separated by a greater-than (**>**) character. For example, the second example instructs you to select the **Close** command from the **File** menu.
Type: **`cd /tmp`**	Bold fixed-width text denotes shell commands that must be entered exactly as they appear.
--logfile=FILE	All caps text often denotes a placeholder (token) for an actual value that must be supplied by the user. In this example, FILE would be an actual filename.
`Installation Complete.`	Regular (not bold) fixed-width text denotes command shell messages, code, and file contents.

Safety admonitions and notices

The following safety admonitions and notices appear in this guide:

DANGER

Danger safety admonitions indicate a hazardous situation which, if not avoided, will result in death or serious injury.

WARNING

Warning safety admonitions indicate a hazardous situation which, if not avoided, could result in death or serious injury.

CAUTION

Caution safety admonitions indicate a hazardous situation which, if not avoided, could result in minor or moderate injury.

IMPORTANT: Important notices contain information essential to software or hardware operation.

NOTE: Notes contain information intended to clarify a topic or procedure. Notes never contain information that will cause a failure if ignored.

TIP: Tips present optional information intended to improve your productivity or otherwise enhance your experience with the product. Tips never contain information that will cause a failure if ignored.

General Information

This chapter provides general information about Avamar terminology, an overview of new installation features for Avamar Data Store Gen4 (also called ADS in this guide), and a high-level road map of the installation.

Topics in this chapter include:

- *Important terms and concepts* (page 11)
- *Information for EMC customers* (page 15)
- *Avamar v6.x installation features overview* (page 16)

Important terms and concepts

This section provides a list of terms used in this guide.

Nodes. The primary building block in any Avamar system is a "node." Each node is a self-contained, rack-mountable, network-addressable server that runs Avamar software on the Linux operating system. All Avamar nodes are Domain Name Server (DNS) clients.

> **IMPORTANT:** The term "server" in the previous definition is used in the typical industry context (that is, a computer that provides services to other computers or devices). However, for the remainder of this guide, unless otherwise specified, the term "server" is used to refer to a single node Avamar system.

Utility Node. In scalable multi-node Avamar servers, a single utility node provides essential internal services for the server (for example, administrator server, replication, external authentication, network time protocol (NTP), and Web access). Because utility nodes are dedicated to running these essential services, they cannot be used to store backups.

Storage Nodes. The remaining nodes in scalable multi-node Avamar servers are storage nodes, which store the actual backups. There are four sizes of storage nodes, the primary difference being the amount of usable storage available. Only 3.9 TB and 7.8 TB storage nodes are offered in multi-node Avamar servers. The other two configurations (1.3 TB and 2.6 TB) are offered only as single node Avamar servers.

Single Node Servers. Single node Avamar servers, whose installation is described in this guide, combine all the features and functions of utility and storage nodes on a single node.

NDMP Accelerator Node. An Avamar NDMP Accelerator (accelerator node) is a dedicated single-node Avamar client that, when used as part of an Avamar system, provides a complete backup and recovery solution for supported EMC Celerra IP storage systems and Network Appliance filers by using Network Data Management Protocol (NDMP) to communicate with these storage devices. It is not part of the ADS Gen4 server. For installation instructions, refer to the *Avamar NDMP Accelerator 6.x User Guide*.

> **IMPORTANT:** All Avamar Data Store Gen4 nodes have 2, 4, 6, or 12 hard drives, depending on node type and storage capacity; Linux operating system; and RAID data protection. The primary differences among all node types are the amount of internal data storage (if any), how it is configured and allocated (that is, RAID level, number of logical units [LUNs] and so forth) and the Avamar application software that is installed on each node type. *Hardware Specifications* (page 23) provides additional information.

Node resource database (probe.xml). An XML file named probe.xml that stores the types and IP addresses of Avamar server nodes. In addition, the probe.xml file stores the types and IP addresses of optional nodes like accelerator nodes, and supports both Network Address Translation (NAT) and multiple network interfaces.

Avamar Downloader Service. A Windows-based file distribution system that delivers software installation packages to target Avamar systems. *Avamar Downloader Service* (page 19) provides more information.

Avamar FTP site. An EMC FTP site that provides anonymous access to Avamar hotfixes and operating system (OS) patches. The FTP site is ftp://ftp.avamar.com.

Avamar Enterprise Manager. A web-based management interface that enables you to monitor and manage multiple Avamar servers. The Avamar Enterprise Manager enables a backup adminstator to view:

- Backup status
- Avamar server status
- Performance details

Avamar v6.0 adds a new feature to the Avamar Enterprise Manager, the System Maintenance application, which enables you to install server software patches, updates, and upgrades on Avamar single node servers.

Avamar Installation Manager. A web interface that manages installation packages. A successful Avamar v6.0 server software installation or upgrade embeds the Avamar Installation Manager functionality in the Avamar Enterprise Manager as a new feature. This feature is called System Maintenance. *AvInstaller Program* (page 17) provides more information.

Avamar login manager. A process that provides access to an external authentication database, which enables the Avamar system to use existing username and password information for Avamar authentication. Without the login manager, Avamar can only use its internal authentication mechanism. An Avamar server installation or upgrade installs the login manager, and then starts it. The login manager uses the domains configuration file to identify the supported domains.

AvInstaller. A backend service that executes and reports package installations. *AvInstaller Program* (page 17) provides more information.

Packages. Avamar software installation files, hot fix patches, and operating system (OS) patches available from the EMC repository. Packages comprise three types:

- Client — A release of Avamar filesystem or application backup software.
- Server — A new release of Avamar server software, a service pack, or a patch for the operating system, MC, or GSAN.
- Workflow — A package that runs operations such as adding a node or replacing a node.

Package files use the file extension “avp.”

Bonded Network Interfaces. Bonded network interfaces are used in configurations that attempt to eliminate node ports and switches as single points of failure. Two separate network switches are required, one connected to each of two physical interfaces of an Avamar Data Store Gen4 node. *Avamar Data Store Networking* (page 34) provides more information.

High-Availability Network. HA configuration provides for continued operation in the event of a single point of failure between network components. The primary objective is to provide multiple paths to the customer network so that the system can recover from an individual device or link failure. To accomplish this, HA employs bonded network interfaces and dual switches. Each switch is connected to one of two physical interfaces of an ADS Gen4 node. *Avamar Data Store Networking* (page 34) provides more information.

ConnectEMC. A Linux-based program that transfers event data from an Avamar server to EMC Technical Support. An Avamar server software installation or upgrade automatically initializes ConnectEMC by passing values from configuration attributes to the ConnectEMC_config.xml file. The server software installation requires you to set the ConnectEMC attributes listed in the following table:

ATTRIBUTE	EXAMPLE SETTING
Site name	ABC Company, Site ID: 123456, Address: 123 Main Street, Anytown, CA 92618 US
Email server	mail
Email sender address	bob@example.com

You can set other ConnectEMC attributes after the installation by using Avamar Administrator. Additional information about ConnectEMC is available from the *Avamar Administration Guide*.

Email home. An Avamar feature that automatically emails configuration, capacity, and general system information to EMC Technical Support once daily, and critical alerts in near-real time on an as needed basis. Email home uses the same email server that you configure for ConnectEMC.

EMC repository. A repository that contains server installation packages, client installation packages, and manifest files. The EMC repository currently spans two locations: ftp://ftp.avamar.com and EMC Subscribenet.

- High urgency packages such as hotfixes and OS patches are available from ftp://ftp.avamar.com.
- Low urgency packages that have security and entitlement considerations are available from EMC Subscribenet.

The actual source location of a package is transparent to the user.

The repository is located on the EMC network. Each EMC customer has its own download center that contains files available to it. These files are maintained by the EMC Subscribenet team. Outgoing communication from the Avamar Downloader Service to the EMC repository is encrypted with SSL over an HTTP connection.

Local repository. The /data01/avamar/repo/packages directory on the Avamar single node server. The directory contains the most current manifest file from the EMC repository, installation packages, and workflow packages. The Avamar Downloader Service pushes packages from the EMC repository to the local repository. If a customer site does not allow Internet access, you can manually copy packages into the local repository.

Manifest file. An XML file listing all packages currently available for download from the EMC repository. When the EMC Subscribenet team adds a package to the EMC repository, it then adds an entry to the manifest file that describes the package. When the EMC Subscribenet team removes the package from the repository, it then removes the entry for the package from the manifest file.

The Avamar Downloader Service automatically downloads the manifest file from the EMC repository once a day and determines if new download packages are available.

The Avamar Downloader Service sends the new manifest file to the local repository for each Avamar system.

Information for EMC customers

Following is a collection of information about Avamar and Avamar Data Store Gen4 that can guide you when installing this product.

The Avamar Support page is a great resource for information and links in the following path:

```
https://support.emc.com/products/Avamar
```

Avamar software downloads are not located on EMC Support Site but rather on the following Avamar FTP site:

```
ftp://ftp.avamar.com
```

Obtaining an Avamar license key file requires sending an email to licensing@emc.com to request the Avamar license keys. Include the EMC product sales order number (required) in the email. Return time for an email response is 48 hours.

For information about cross-version and cross-equipment compatability, refer to the *Avamar Compatibility and Interoperability Matrix* at http://support.EMC.com.

For numerous best practice tips about installing, configuring, upgrading, and using Avamar, refer to the *Operational Best Practices* guide at http://support.EMC.com.

Numerous technical notes provide supplemental information about rare, unique, or version-specific installation, implementation, and configuration scenarios at http://support.EMC.com.

Fundamental Avamar Principles

When working with Avamar, always consider the following:

1. The best practice for replication is to move data from an older generation Avamar server to a newer one and not the reverse. This scenario is typically used to replicate data from the old server as a first step before upgrading it to the latest version of Avamar software, after which the data can be replicated back.
2. All non-RAIN systems must be replicated.

Avamar v6.x installation features overview

The `avqinstall` command-line program, which was used in previous generations of Avamar Data Store to install server software, is no longer supported or required. Avamar v6.0 uses AvInstaller and its web-based Avamar Installation Manager user interface to automate the software installation process on ADS Gen4 servers. AvInstaller runs on the single node ADS Gen4 server.

Avamar v6.x also includes the Avamar Downloader Service, a Microsoft Windows-based application that automates the installation of future patches and other packages to your Avamar system.

How long will the installation take?

The time to complete the Avamar v6.0 server software installation takes about 20 minutes plus the amount of time it takes to complete the following preinstallation tasks:

- Installing the AvInstaller
- Uploading the Avamar v6.x software installation package to the single node server

IMPORTANT: Uploading the installation package can take a significant amount of time depending on the method used. Installing and configuring the Avamar Downloader Service is considered a post-installation task because it is not required to perform installation of the Avamar v6.x software on the ADS Gen4 system.

AvInstaller Program

The AvInstaller program is included in the AvamarBundle_SLES11_64-VERSION.zip file on your laptop (where VERSION is the Avamar product version number). *Tools, equipment, software, data requirements* (page 22) provides more information.

For new installations of Avamar v6.0, AvInstaller software and the Avamar Installation Manager user interface are installed on the single node Avamar server.

The Avamar Installation Manager user interface enables you to:

- Install or upgrade the Avamar v6.x software
- Install OS, GSAN, or other hotfix patches after initial Avamar software installation

AvInstaller manages the:

- EMC repository manifest
- Download packages from the Avamar Downloader Service
- Packages directory for any software packages manually dropped (copied) in the Avamar server's local repository
- Dependency and version checks of the download packages
- Temporary directory used to extract the packages
- Deletion of install packages after a successful server software installation or upgrade

For Avamar 6.0 and later, the Avamar Installation Manager is integrated with the Avamar Enterprise Manager as a new tab, the System Maintenance tab. The System Maintenance tab provides a user interface that enables you to manage all Avamar server upgrades or installations.

NOTE: For upgrades and installations of Avamar filesystem or application clients, use the Client Manager tab. The *Avamar Administration Guide* provides more information about the Avamar Client Manager.

Process flow

The following diagram shows how the Avamar Downloader Service and AvInstaller work together with other components to automatically provide installation, upgrade, and hot fix packages.

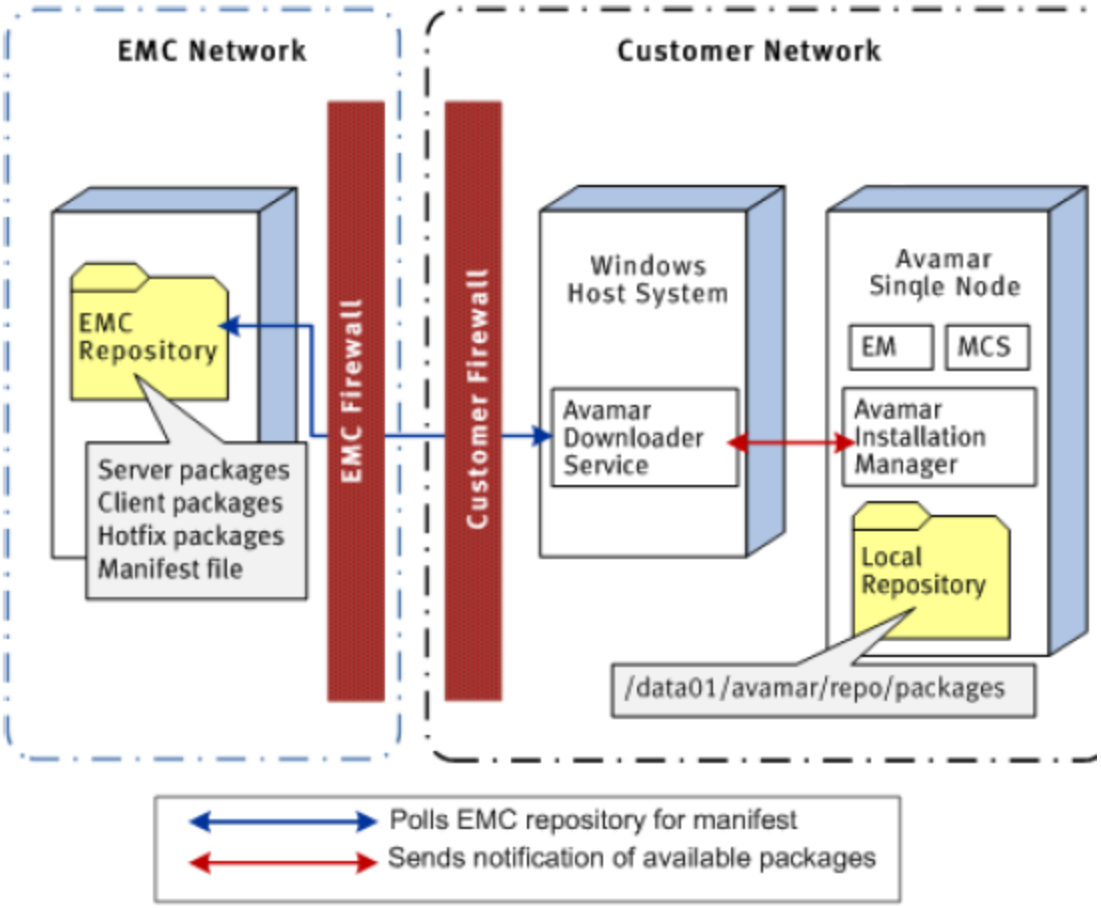

Process flow tasks:

1. The Avamar Downloader Service checks with the EMC repository for new manifest files. This check is done automatically every 24 hours.
2. The Avamar Downloader Service downloads the manifest from the EMC repository and pushes it to the AvInstaller.

> **NOTE:** During the first communication handshake between the Avamar Downloader Service and AvInstaller, the Avamar Downloader Service passes information such as its version, its host and IP address, and so forth, to the AvInstaller.

3. The AvInstaller processes the manifest file and notifies the user of new packages.

4. The user requests the package by clicking the Download button in the Avamar Installation Manager.
5. The Avamar Downloader Service then downloads the package and pushes it to the AvInstaller.
6. The user installs the package by clicking the Install button in the Avamar Installation Manager.

Log files

The AvInstaller provides log file information through the Avamar Installation Manager user interface. You can export the log information to a file (.xls or .pdf).

The Avamar Installation Manager also provides the Download all system logs icon, which enables you to download all system log files for troubleshooting issues, for example. You must log in to the EMC Customer Support account to use the Download all system logs icon.

In-flight encryption

A new installation of Avamar 6.0 sets in-flight encryption to High as the default setting. A server upgrade from Avamar 4.1.x or 5.0.x to 6.0, however, does not change the current in-flight encryption setting. The *Avamar Administration Guide* provides more information about in-flight encryption.

Avamar Downloader Service

The Avamar Downloader Service is a file distribution system that delivers software installation packages to target Avamar systems. The file distribution process uses minimal bandwidth by downloading only files that you request through the Avamar Installation Manager. The Avamar Downloader Service uses a local file cache to ensure that a file is fetched only once from the EMC repository no matter how many times an Avamar system requests the file. You can remove old files from the local repository to free disk space.

Avamar Downloader Service security

The Avamar Downloader Service validates each package it downloads to ensure the package has been properly signed and transmitted.

The Avamar Downloader Service accepts incoming requests only from Avamar systems that are on a known systems list. The Avamar Downloader Service encrypts outgoing communication to the EMC repository by using SSL (Secure Socket Layers) over an HTTP connection.

NOTE: If your site prohibits access to the Internet, you can manually copy packages to the /data01/avamar/repo directory, and then move them to the /packages directory on the single-node server instead of using the Avamar Downloader Service.

Avamar Downloader Service components

The following table describes the components of the Avamar Downloader Service.

COMPONENT	DESCRIPTION
AvamarDownloaderService Windows service	Monitors the EMC repository. When a package is available for the Avamar system, the AvamarDownloaderService service automatically downloads the package and pushes it to the local repository on the Avamar single-node server.
Avamar Downloader Service configuration application	A user interface that enables you to configure and modify Avamar Downloader Service configuration parameters.
Avamar Downloader Service monitor	A process that provides status message about the Avamar Downloader Service.
	Task tray icon for the Avamar Downloader Service application. Moving the mouse over this icon displays status messages from the Avamar Downloader Service monitor. Right-clicking the icon displays three options: Configure Avamar Downloader Service — Opens the Avamar Downloader Service configuration application. Open Download Repository — Opens the local file cache directory on the Windows server: `C:\Program Files\EMC\Avamar Downloader Service\repository` Close Notification Display — Closes the task tray application.

The Avamar Downloader Service installation also creates:

- Local repository in the installation directory.

  This directory is where the Avamar Downloader Service puts packages it fetches from the EMC repository.

- Start menu group Programs > EMC > Avamar Data Store that contains:
  - Avamar Downloader Service Configuration
  - Start Avamar Downloader Service Monitor

Desktop shortcut to the Avamar Downloader Service configuration application.

Installation Prerequisites

An Avamar Data Store Gen4 single node server combines on a single node all the features and functions of the utility and storage nodes of a Gen4 multi-node server. That includes hosting basic control and communication services (for example, administrator server, NTP, and so forth) as well as storing the actual client backups.

Refer to *Hardware Specifications* (page 23) for Avamar Data Store Gen4 node and configuration specifications.

> **IMPORTANT:** EMC recommends that Avamar single node servers be used exclusively for running Avamar software and storing client backups.

Accelerator node. Avamar provides one other specialized, optional node, the accelerator node. It uses NDMP to provide data protection for EMC Celerra and Network Appliance NAS filers. This type node is typically racked near the NAS device. For installation instructions, refer to the *Avamar NDMP Accelerator 6.x User Guide*.

Site, environmental requirements

For a complete understanding of onsite hardware requirements that must be fulfilled before installation of an Avamar Data Store system (rack space, power, cooling and so forth), refer to the *Site Prep Technical Specifications* at http://support.EMC.com.

Tools, equipment, software, data requirements

Before going onsite, obtain the following items:

REQUIREMENT	DESCRIPTION
Laptop Computer	Windows XP operating system
Laptop Applications	PuTTY, WinSCP
Customer-Supplied Information	Hostnames, IP addresses for: • All ports you plan to use on the single node server • One or more Network Time Protocol (NTP) servers • One or more Domain Name System (DNS) servers • SMTP server Gateway, netmask and domain for: • The single node server IP addresses for: • The Dell Remote Access Card Firewall openings (if appropriate)
Files	Avamar software, utility, and switch patch files • AvamarBundle_SLES11_64-VERSION.zip, which includes: avinstaller-bootstrap-VERSION.sles11_64.x86_64.run dpnnetutil-VERSION.run AvamarDownloaderService-windows-x86_VERSION.exe (32-bit version) AvamarDownloaderService-windows-x86_64-VERSION.exe (64-bit version) • AvamarBundle_SLES11_64-VERSION.md5sum where VERSION is the Avamar release version number The latest version of this installation guide **NOTE:** After copying these files to your laptop, do the following: 1. Run the `md5sum` command against AvamarBundle_platform_version.zip to ensure corruption did not occur during copying. If the md5 checksum does not match, recopy the file to your laptop. 2. Extract onto your laptop the files in AvamarBundle_platform_version.zip.
Licensing Data	Customer Number (Customer ID), Reference ID (Asset Reference ID)
Cabling	Cat6 Ethernet cable

Hardware Specifications

Avamar Data Store Gen4 single node servers consist of the following hardware:

1.3 TB Storage Node

- Two 2 TB 7.2K rpm SATA hard drives
- Dual power supplies
- Four 10/100/1000baseT GbE ports
- Dell Remote Access Card (iDRAC6 Enterprise)
- SuSE Linux Enterprise Server operating system
- 1.3 TB licensed capacity, 2 TB per node post-RAID capacity

2.6 TB Storage Node

- Four 2 TB 7.2K rpm SATA hard drives
- Dual power supplies
- Four 10/100/1000baseT GbE ports
- Dell Remote Access Card (iDRAC6 Enterprise)
- SuSE Linux Enterprise Server operating system
- 2.6 TB licensed capacity, 4 TB per node post-RAID capacity

3.9 TB Storage Node

- Six 2 TB 7.2K rpm SATA hard drives
- Dual power supplies
- Four 10/100/1000baseT GbE ports
- Dell Remote Access Card (iDRAC6 Enterprise)
- SuSE Linux Enterprise Server operating system
- 3.9 TB licensed capacity, 6 TB per node post-RAID capacity

7.8 TB Storage Node

- Twelve 2 TB 7.2K rpm SATA hard drives
- Dual power supplies
- Four 10/100/1000baseT GbE ports
- Dell Remote Access Card (iDRAC6 Enterprise)
- SuSE Linux Enterprise Server operating system
- 7.8 TB licensed capacity, 12 TB per node post-RAID capacity

IMPORTANT: The 7.8 TB storage node cannot be installed in a Telco rack.

Accelerator Node

- Two 300 GB 15K rpm SAS hard drives
- Dual power supplies
- Four 10/100/1000baseT GbE ports
- Dell Remote Access Card (iDRAC6 Enterprise)
- SuSE Linux Enterprise Server operating system

IMPORTANT: No customer backups are stored locally on an accelerator node. For installation instructions, refer to the *Avamar NDMP Accelerator 6.x User Guide*.

System Preparation

This chapter prepares the Avamar Data Store Gen4 single node server for Avamar software installation.

The previous chapters provide reference materials. The actual installation process begins with the following instructions.

IMPORTANT: If during any part of these installation instructions you encounter hardware or software failure, contact your EMC Account Team for assistance in obtaining the proper services. Installation is not covered under warranty or maintenance contract.

IMPORTANT: Modifying the Avamar system in any way other than as instructed by product documentation or authorized EMC personnel is strictly forbidden. This includes installing third-party software; creating, modifying or deleting any file or directory in an Avamar system; or changing any configuration settings in the hardware, firmware or operating system.

Prepare the system for Avamar software installation

1. Position the single node server in the desired location.

   Refer to *Appendix A — Mounting Avamar Single Node Server* (page 52) for hardware installation instructions.

   NOTE: When installing Avamar nodes in available space in existing customer racks, follow the racking instructions to the extent possible.

IMPORTANT: Do not power up cold Avamar Data Store equipment. The approved operating temperature range is 50° to 95°F (10° to 35°C), and the typical temperature gradation is 10°C per hour. If ADS components have been located in a colder environment, allow time for the equipment to reach room temperature.

2. Connect power to the Avamer server and press the power button on the front of the node.

   The nodes power up.

3. Configure the network switch or switches to which you plan to connect the single node Avamer server for a flat layer 2 configuration.

Prepare the single node server for software installation

Perform the following to prepare the single node server for Avamar software installation. These steps include configuring the backup network port (eth0, Gb1) of the node and copying the bootstrap utility files onto the single node server.

IMPORTANT: Do not connect the Avamar Data Store server to the external customer's network yet. Doing so at this time could interfere with the function of the customer's production network.

1. Configure your laptop as follows:

   (a) From **Start**, open **Settings > Network and Dial-up Connections** and select **Local Area Connection**.

   (b) Select **Properties**.

   (c) Double-click **Internet protocol (TCP/IP)**.

   (d) Click **Use the following address**.

   (e) Set IP address to 192.168.0.100.

   (f) Set netmask to 255.255.255.0.

   Setting a gateway is not necessary.

   (g) Click **OK**.

   (h) Click **OK** again.

   (i) Connect your laptop to the node’s iDRAC network interface with a Cat6 Ethernet cable.

   Refer to *ADS Gen4 hardware* (page 55) for more information.

(j) At a Windows command prompt, type `ipconfig` to ensure the new IP address is active.

Information similar to the following is displayed:

```
Windows IP Configuration
Ethernet adapter Local Area Connection:
    Connection-specific DNS Suffix .:DEFAULT
    IP Address ..........................:192.168.0.100
    Subnet Mask .........................:255.255.255.0
    Default Gateway .....................:DEFAULT
```

where `DEFAULT` is the default setting on your laptop.

If the IP Address and Subnet Mask are not correct, disable and reenable the Ethernet connection in the **Local Area Connection** dialog box.

2. On your laptop, open a web browser to http://192.168.0.120.

NOTE: A security certificate error might be displayed at this point. It is OK to ignore it.

See next image.

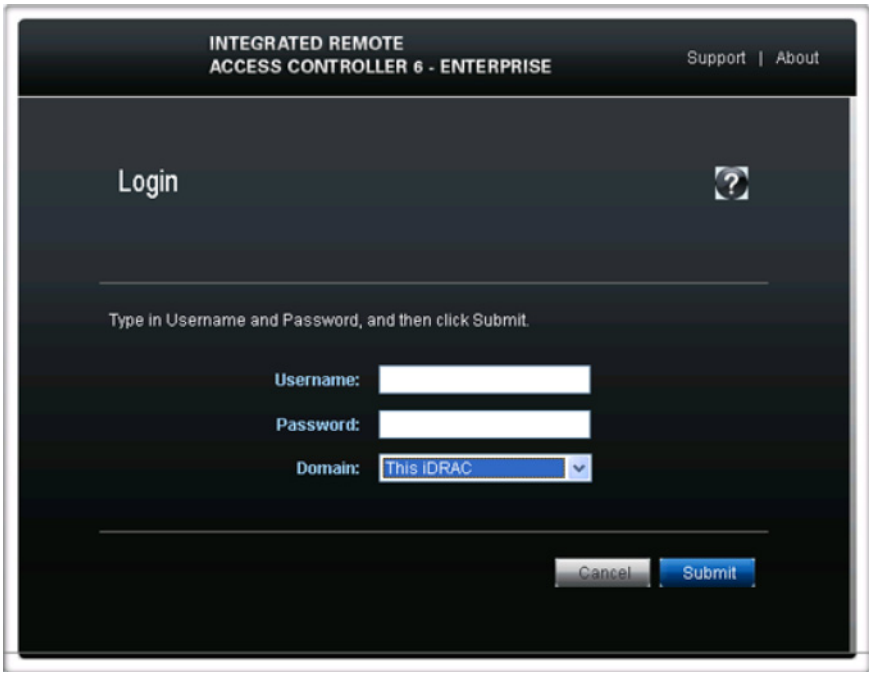

iDRAC user=root

Log into the iDRAC interface on the node using the iDRAC root user account and password (`calvin`) and click **Submit**. The Virtual Console and Virtual Media window appears. See next image.

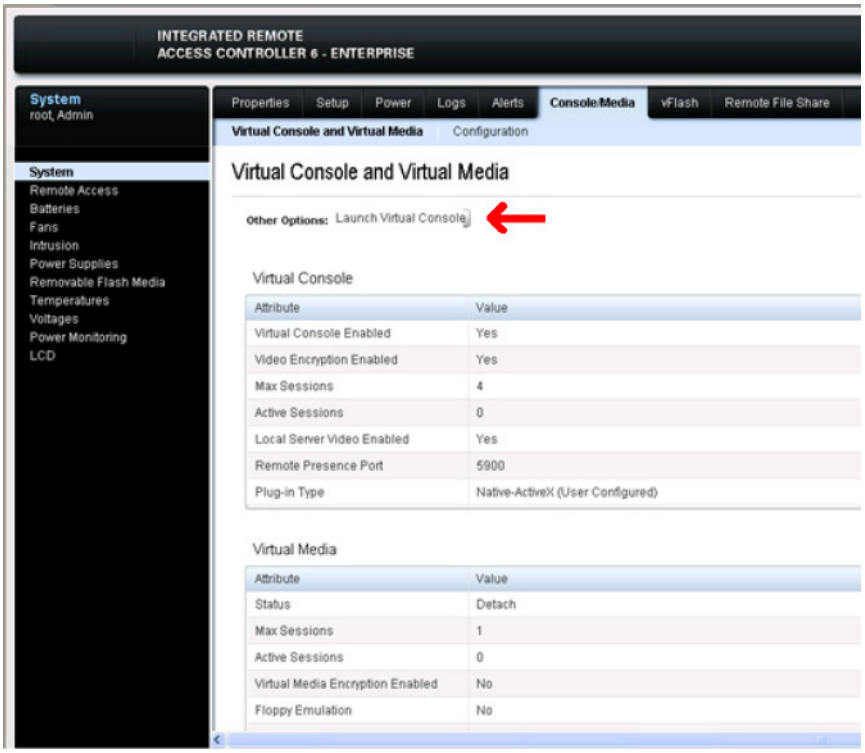

3. Go to the **Console/Media** tab and click **Launch Virtual Console**.

NOTE: A security certificate error again might be displayed. It is OK to ignore it. Also, you might be prompted to install an ActiveX control add-on. Do so at this time.

This action takes a few minutes to open the console. See next image.

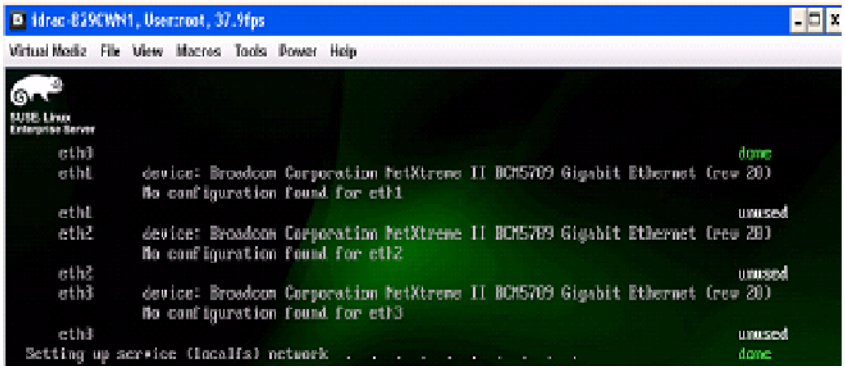

4. Open the YaST Linux configuration application by typing:

   `yast`

   The YaST Control Center appears. See next image.

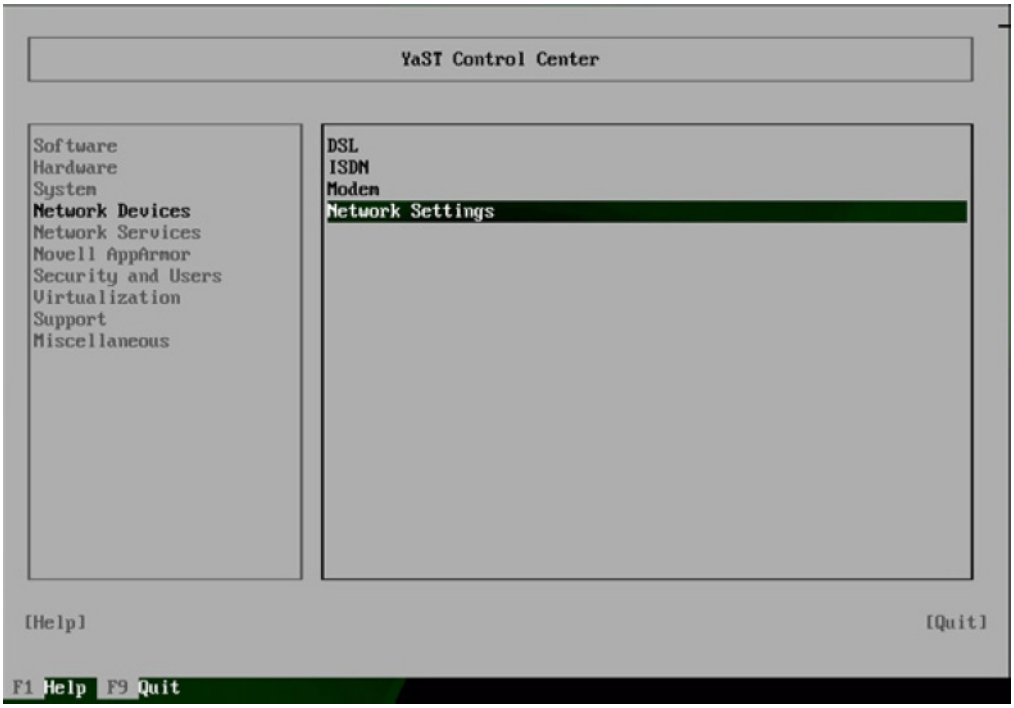

NOTE: In YaST, use the **Tab** key to move to an option and correct typing errors or replace default settings by typing **Ctrl-H** (neither the **Delete** nor **Backspace** keys provide the functions printed on the keys). To select a checkbox (a set of parentheses), press the space bar.

5. Use the down arrow to highlight **Network Devices**, the right arrow to move to the box on the right, and the down arrow to highlight **Network Settings**, and then press **Enter**.

   The Network Settings screen appears. See next image.

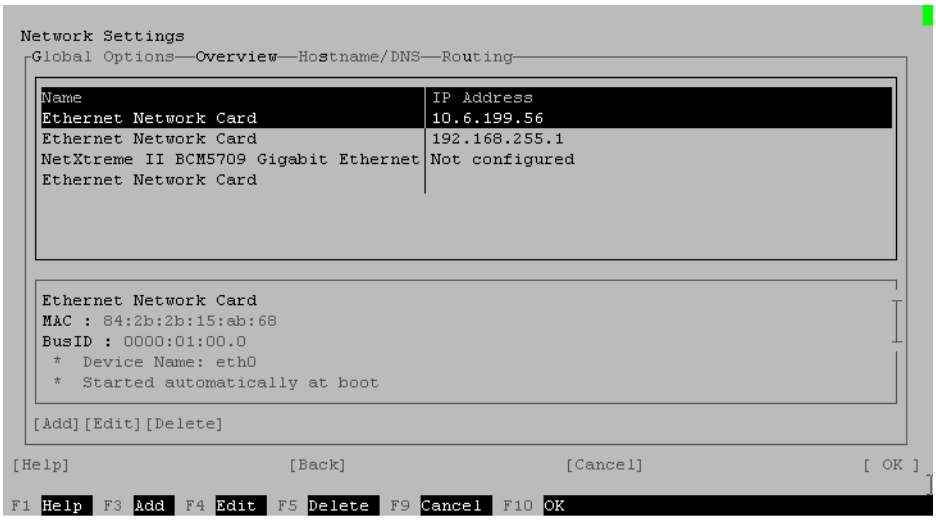

6. Tab to the Name list and uses the arrow keys to select the eth0 card.

   As you move from one entry to the next in the list, the description changes in the bottom box. Look for `Device Name: eth0`.

7. After selecting the eth0 device, tab to **Edit** and press **Enter**.

   The Network Card Setup screen appears. Use the arrow keys to select the **Address** tab, if necessary. See next image.

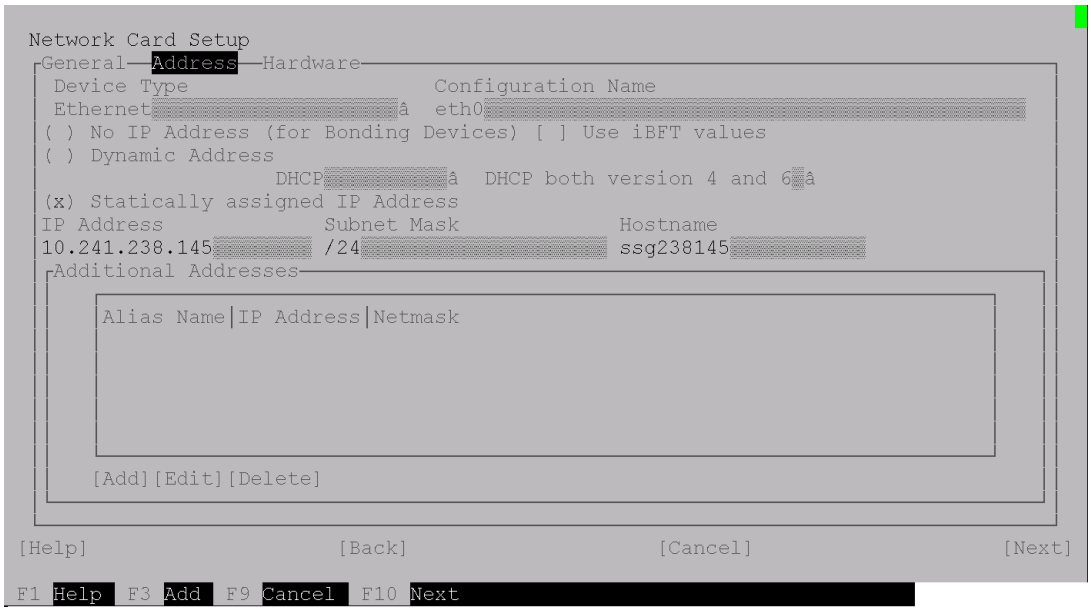

8. Configure DNS parameters (hostname, domain, search, and primary and secondary name servers), gateway, IP address and netmask of the backup network (eth0, Gb1) of the Avamar node.

   (a) Tab to **Statically assigned IP address**.

   (b) Press the space bar to select the checkbox (with an **X**).

   (c) Tab to **IP address**.

   (d) Type the IP address of the eth0 port of the Avamar node.

   (e) Tab to **Subnet Mask**.

   (f) Type the subnet mask address.

   (g) Tab to **Hostname**, use **CTRL-H** to delete the default hostname, and then type the hostname for the Avamar node.

   Hostname must resolve to the IPv4 address used by backup clients, the address that will be assigned to the Avamar node backup network interface (eth0) in the followup Avamar server software installation.

   (h) Tab to **Next** at the bottom of the screen and press **Enter**.

   The Network Settings screen appears.

   (i) Tab to the top menu, use the arrow keys to select **Hostname/DNS**. See next image.

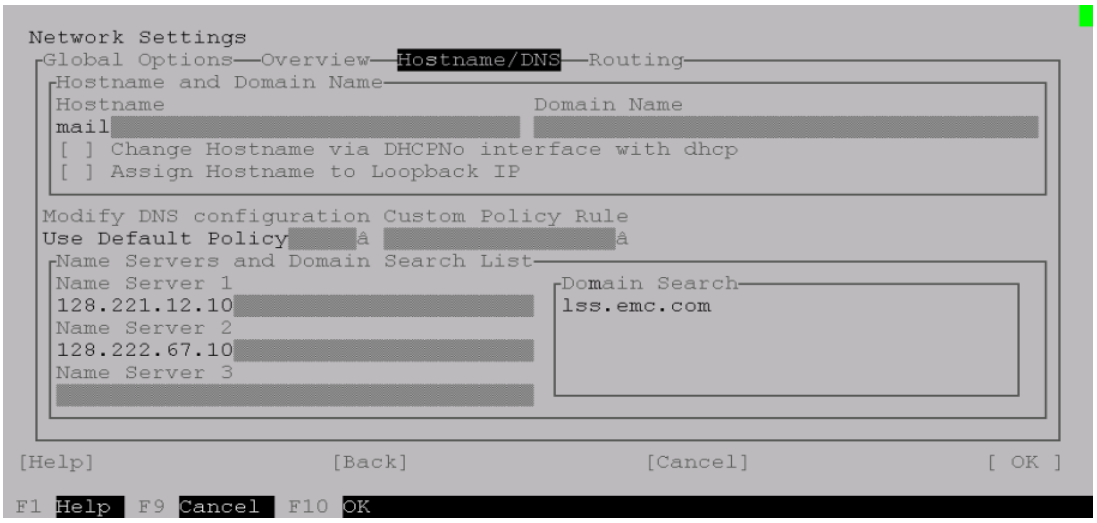

(j) Tab to **Hostname**, use **CTRL-H** to delete the default hostname, and then type the correct hostname.

This parameter must be the short name of the hostname entered in step g.

(k) Tab to **Domain Name**, use **CTRL-H** to delete the default domain name, and then type the correct domain name.

(l) Tab to the DNS configuration section and specify those parameters.

Enter up to three IPv4 addresses of DNS recurring name resolving servers.

(m) Tab to **Domain Search**, use the right arrow to move the cursor to the end of the default entry, use **CTRL-H** to delete the default domain name, and then type the correct domain name to be searched.

(n) Tab to the top menu and use the right arrow to select **Routing**.

The Network Settings-Routing screen appears and **Default Gateway** should be highlighted. See next image.

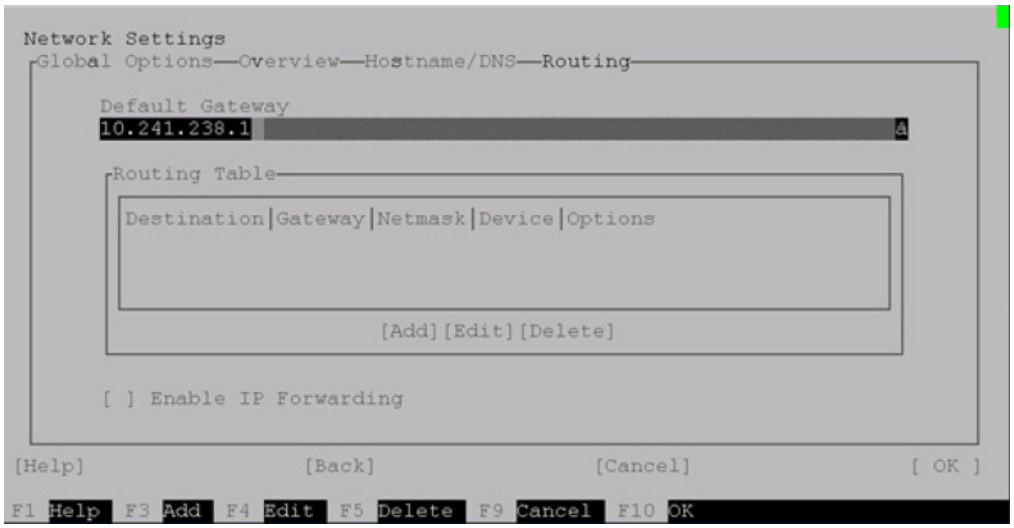

9. Type the default gateway address.
10. Tab to **OK** at the bottom right of the screen and press **Enter**.

    The Network Settings screen closes and a saving configuration information message is displayed.
11. In the YaST Control Center, tab to **Quit** at the bottom right of the screen and press **Enter**.
12. Copy the following file from your laptop to the /usr/local/avamar/src/ directory of the Avamar node:

    - avinstaller-bootstrap-VERSION.sles11_64.x86_64.run

      where VERSION is the Avamar product version number.

    Do this by mounting a USB memory stick in a USB port of the Avamar node and then performing the following:

    (a) Insert the memory stick into a USB slot.

    (b) Determine the device ID the operating system assigned to the drive by typing:

    ```
    fdisk -l
    ```

    The device at the bottom of the resulting output is the USB memory stick. Note the device ID (/dev/SDID).

    (c) Mount the USB drive by typing:

    ```
    mount /dev/SDID /mountpoint
    ```

    where SDID is the device ID you determined in step b.

    (d) Copy each file by typing:

    ```
    cp /dev/SDID/FILENAME /usr/local/avamar/src/
    ```

    where SDID is the device ID you determined in step b and FILENAME is one of files listed at the beginning of step 9.

    IMPORTANT: Do not run the bootstrap file at this time. It must be run in the proper sequence as described in this document.

13. Exit the command shell.
14. Disconnect the Ethernet cable from the Avamar node.
15. Plug in cabling from the eth0 (Gb1) port of the Avamar node to the customer network, and replication and management network cabling, if used, at this time.

    IMPORTANT: Do NOT plug in cabling for eth2 (Gb3) if high-availability backup configuration is to be used. Doing so at this time can cause serious disruptions to the customer network.

16. Verify connectivity to eth0 of the Avamar node from the customer's network.

    Do this by connecting to a device on the customer's network outside of the Avamar system and successfully establishing a PuTTY session with the node.

IMPORTANT: This concludes installation activities for Avamar Data Store.

AVAMAR DATA STORE NETWORKING

This chapter provides a comprehensive description of **optional** networking features and requirements for the Avamar Data Store Gen4 single node server. For the most part, the information in this chapter is for reference only. If advanced network or replication configuration is required, this chapter describes procedures that must be performed before Avamar software installation can be done.

Included in this chapter are:

- General overview of ADS Gen4 networking principles related to single node Avamar servers
- Descriptions of different network configurations ADS single node servers can interconnect with
- An overview of the optional dpnnetutil advanced configuration utility
- Descriptions of replication schemes supported by ADS Gen4
- ADS Gen4-specific instructions for configuring an accelerator node

Overview

Unlike ADS Gen4 multi-node servers, the Avamar single node server has no internal network functionality. The eth1 port (Gb2) is not dedicated to Avamar-specific traffic. Customers typically provide network switching and connections to match their infrastructure for backups, replication, and node management.

Default network configuration is performed during Avamar software installation.

For the ADS external network, default settings are:

- All nodes are connected directly to customer network switches through eth0 (Gb1) and eth2 (Gb3) ports (bonded as bond0) by default for backing up customer data
- eth0 (Gb1) is the primary, eth2 (Gb3) is the secondary or failover.
- If iDRAC functionality is used and set to shared, the default shared port is eth0 (Gb1) on each node.

The preceding default settings can be changed through the dpnnetutil utility described in *dpnnetutil advanced configuration* (page 38).

Basic networking configuration

ADS Gen4 single node servers follow these configuration principles:

- All networking ports on the node are bonded in pairs, by default.
- Gb1 (eth0) and Gb3 (eth2) port bonding on storage nodes can be broken to facilitate incoming replication or node management. If this bond is broken, high availability backup capability is not possible. Refer to *ADS Gen4 replication* (page 39)
- If the customer's network environment is segregated using VLANs, corresponding VLANs must be configured on the single node Avamar server. Consult with the your network administrator to obtain a list of VLAN IDs to configure when running the `dpnnetutil` utility.
- For ADS networks that do not require advanced configuration like VLAN support, the network configuration workflow included in the standard software installation process is used. The exception is eth0 on the single node server, which must be configured in advance of running AvInstaller. See *Prepare the single node server for software installation* (page 26).
- All node ports autonegotiate to 1 Gb Ethernet (full duplex) on your network.
- Connections to your network are standard leaf connections directly with the single node server.

See *ADS Gen4 hardware* (page 55) for descriptions and images related to node components. See the following images for further clarification of possible ADS Gen4 networking configurations.

Network configurations supported by ADS Gen4

The following sections describe three distinct networking scenarios supported by ADS Gen4 single node servers:

- Single uplink to your network
- Dual uplink to your network
- Dual uplink plus options to your network

Single uplink to your network

The image that follows displays a single uplink from the Avamar single node server to your network switch.

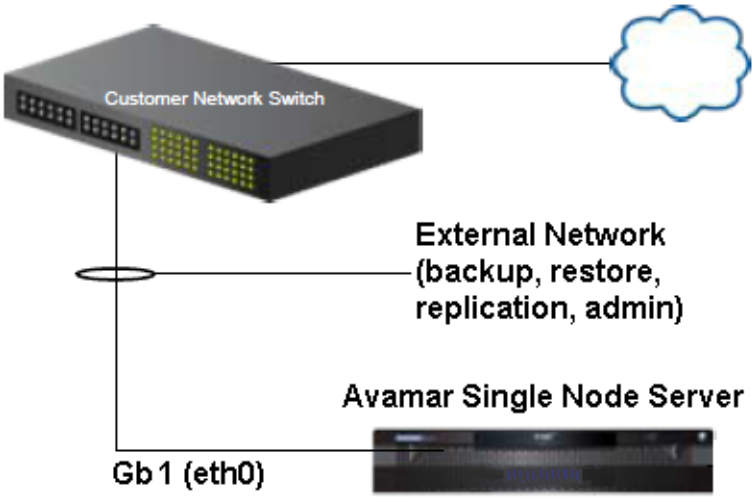

Dual uplink to your network

For high-availability configurations, the image that follows displays dual uplinks from the Avamar single node server to two network switches.

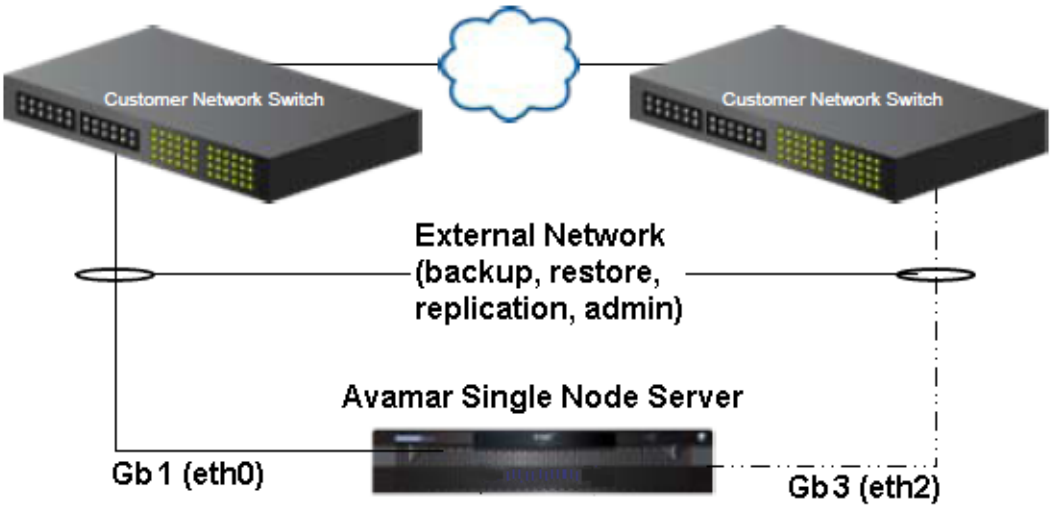

The high-availability feature provides an Avamar server that continues operating through any single network component failure, including:

- any ADS NIC on your network
- any single uplink cable from the ADS server to your network

- any port on your network used in the uplink
- an entire network switch used in the uplink
- connectivity between network switches used in the uplink

Dual uplink plus options to your network

For high-availability configurations plus replication and management traffic options, the image that follows displays dual uplinks from the Avamar single node server to network switches for high-availability backups, and single or dual connections to your network for outgoing replication or MC/Admin traffic.

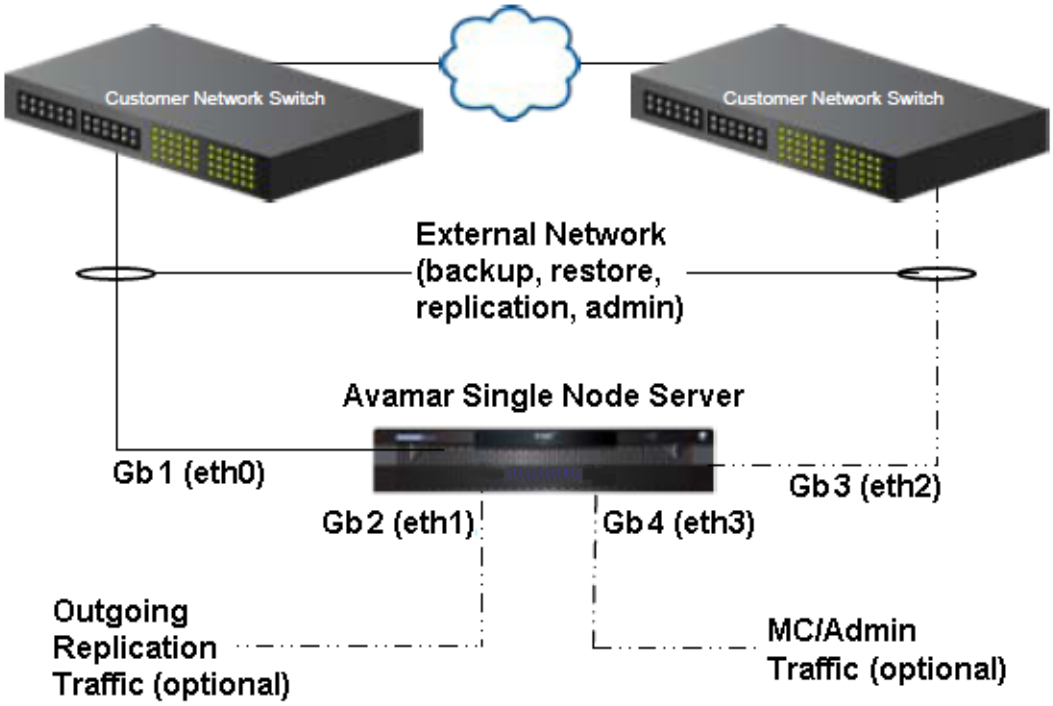

This high-availability configuration provides separate replication and MC/Admin connectivity as well as an Avamar server that continues backup operations through any single failure in a default or optional network component, including:

- any ADS NIC on the external network
- any single uplink cable from the ADS system to your network
- any port on your network used in the uplink
- an entire network switch used in the uplink
- connectivity between network switches used in the uplink

dpnnetutil advanced configuration

For ordinary implementations, AvInstaller provides all functionality required to configure networking on an ADS Gen4 single node server.

For more advanced configurations, the **dpnnetutil** interactive utility must be run before AvInstaller can be run. Advanced configuration scenarios include:

- Support for VLAN interfaces to backup networks

> **IMPORTANT:** If your site requires advanced network configuration, alert your EMC Account Team that the implementation specialist must run dpnnetutil before running AvInstaller. While dpnnetutil is being run, you may be asked to check on certain hardware-related connectivity errors that the utility might report.

Features

Running **dpnnetutil** provides the following features:

- Detects cabling and connectivity errors during configuration, including:
  - No link detected on a network interface
  - Link speed below 1GB
  - Auto negotiation
  - Full duplex
- For any error detected, a dialog box is displayed that describes the error and the network interfaces affected.
- Determines cabling schema based on the number of physical network interfaces and link presence
- Configures backup, replication, and management networks, including:
  - Requesting IP addresses and netmask of replication and management networks
  - Allowing edit and confirmation later
- Configures backup VLAN interfaces, including:
  - Requesting a list of VLAN IDs available on the customer network switch
  - Requesting corresponding parameters for each VLAN ID (IP, netmask)

The **dpnnetutil** utility populates probe.xml with information obtained during the configuration procedure.

ADS Gen4 replication

The networking architecture of Avamar Data Store Gen4 and the Avamar software provide two types of replication: Basic and Dedicated. They are described in the following sections.

Basic Replication

This configuration is the kind available in previous generations of Avamar Data Store servers. The source and target systems each have a single network for traffic of all purposes. Replication is in and out on the single network between the source and target pair. The target system can be either a multi-node or single node Avamar server. See next image (multi-node example).

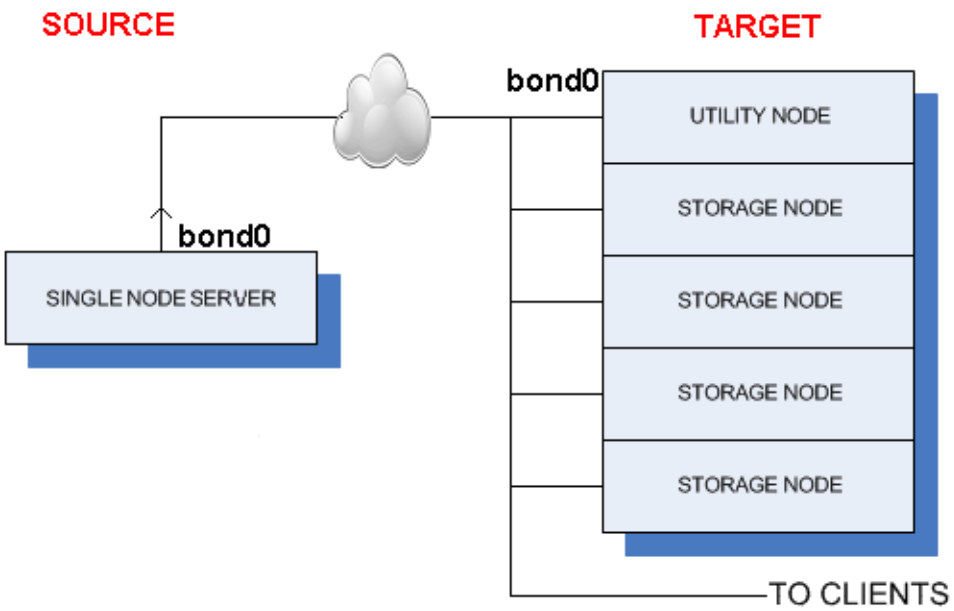

To configure basic replication, first use AvInstaller or, in the case of advanced network configurations, dpnnetutil to set up system networking. After that, you must perform the following:

- On the source system:
  1. Configure Avamar replication to the target system.
     (a) Log in again to Avamar server.
     (b) Open /usr/local/avamar/etc/repl_cron.cfg.
     (c) Modify the following parameter:
        - --dstaddr=BOND0IPADDR

          where BOND0IPADDR is the IP address of bond0 on the single node or utility node of the target system.

     (d) Save the file.
- On the target system:

  No additional steps are required on the target system.

Dedicated Replication

This configuration has dedicated networks on both source and target systems. On the source system, dedicated backup, replication, and management ports can be configured. If the target system is a single node Avamar server, the bond between backup ports (eth0 and eth2) are broken and the eth2 network is dedicated to replication traffic. If the target system is a multi-node system, the bonds between backup ports (eth0 and eth2) on the storage nodes only are broken and the eth2 network is dedicated to replication traffic. See next image (multi-node example).

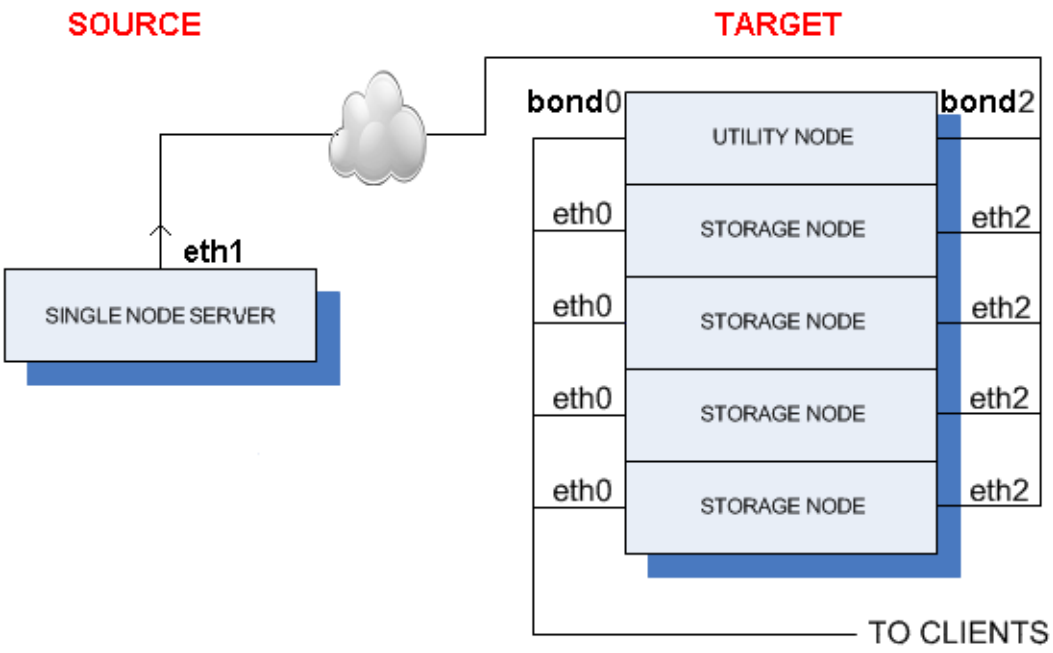

To configure dedicated replication, first use AvInstaller or, in the case of advanced network configurations, dpnnetutil to set up system networking. After that, you must perform the following:

- On a multi-node target system:
  1. On each target storage node, break network bond0 and configure the discrete eth2 port.
     (a) Log in to the storage node.
     (b) Open /etc/sysconfig/network/ifcfg-BOND0 in a text editor.
     (c) Save IPADDR and NETMASK parameters for later use.
     (d) Remove /etc/sysconfig/network/ifcfg-BOND0.
     (e) Edit /etc/sysconfig/network/ifcfg-eth0.
     (f) Add IPADDR and NETMASK parameters are the same as in ifcfg-BOND0 (see step c).
     (g) Delete the following bonding information:
        - MASTER=bond0
        - SLAVE=yes
     (h) Save the file.

(i) Edit /etc/sysconfig/network/ifcfg-eth2.

(j) Add new IPADDR and NETMASK parameters for eth2 replication network.

(k) Delete the following bonding information:

- MASTER=bond0
- SLAVE=yes

(l) Save the file.

(m)Do one of the following:

IF	DO THE FOLLOWING
VLAN interfaces were configured based on this bond	Go to step n.
VLAN interfaces were not configured based on this bond	Go to step s.

(n) Rename /etc/sysconfig/network/ifcfg-bond0.ID to ifcfg-eth0.ID

where ID is a VLAN ID.

(o) Edit /etc/sysconfig/network/ifcfg-eth0.ID.

where ID is the same VLAN ID in step n.

(p) Change the following line as shown:

```
ETHERDEVICE=eth0
```

(q) Save the file.

(r) Repeat steps n through q for each VLAN based on bond0.

(s) Restart network service by typing the following command:

```
service network restart
```

(t) Repeat steps a through s on each target storage node.

2. On the target utility node, use the nodedb command to add the new eth2 storage node IP addresses for replication use.

(a) Log in to the utility node.

(b) Add the eth2 ports to the probe.xml by typing the following command for each storage node:

```
nodedb add if --node=NODE-ID --addr=ETH2IP \
--nwgrp=NETWORK_GROUP_ID --allow=replication
```

where NODE-ID is the node ID (0.1, 0.2, and so forth) for each storage node, ETH2IP is the IP address of the eth2 port, and NETWORK_GROUP_ID is any string specified by the customer network administrator (example: subnet238).

Example:

```
nodedb add if --node=0.1 --addr=1.2.3.4 --nwgrp=3 \
--allow=backup
```

- On a single node target system:
  1. Break network bond0 and configure the discrete eth2 port.
     (a) Log in to the Avamar server.
     (b) Open /etc/sysconfig/network/ifcfg-BOND0 in a text editor.
     (c) Save IPADDR and NETMASK parameters for later use.
     (d) Remove /etc/sysconfig/network/ifcfg-BOND0.
     (e) Edit /etc/sysconfig/network/ifcfg-eth0.
     (f) Add IPADDR and NETMASK parameters are the same as in ifcfg-BOND0 (see step c).
     (g) Delete the following bonding information:
        - MASTER=bond0
        - SLAVE=yes
     (h) Save the file.
     (i) Edit /etc/sysconfig/network/ifcfg-eth2.
     (j) Add new IPADDR and NETMASK parameters for eth2 replication network.
     (k) Delete the following bonding information:
        - MASTER=bond0
        - SLAVE=yes
     (l) Save the file.
     (m)Do one of the following:

IF	DO THE FOLLOWING
VLAN interfaces were configured based on this bond	Go to step n.
VLAN interfaces were not configured based on this bond	Go to step s.

     (n) Rename /etc/sysconfig/network/ifcfg-bond0.ID to ifcfg-eth0.ID

         where ID is a VLAN ID.
     (o) Edit /etc/sysconfig/network/ifcfg-eth0.ID.

         where ID is the same VLAN ID in step n.
     (p) Change the following line as shown:

         ```
         ETHERDEVICE=eth0
         ```
     (q) Save the file.
     (r) Repeat steps n through q for each VLAN based on bond0.
     (s) Restart network service by typing the following command:

         `service network restart`

2. Use the nodedb command to add the new eth2 storage node IP addresses for replication use.

   (a) Log in to the Avamar server.

   (b) Add the eth2 ports to the probe.xml by typing the following command:

   ```
   nodedb add if --node=0.1 --addr=ETH2IP \
   --nwgrp=NETWORK_GROUP_ID --allow=replication
   ```

   where ETH2IP is the IP address of the eth2 port, and NETWORK_GROUP_ID is any string specified by the customer network administrator (example: subnet238).

   Example:

   ```
   nodedb add if --node=0.1 --addr=1.2.3.4 --nwgrp=3 \
   --allow=backup
   ```

- On the source system:

1. Set up a static network route for outgoing replication data through eth1 of the target system.

   (a) Log in to the Avamar single node server.

   (b) Create /etc/sysconfig/network/ifroute-bond2 in a text editor.

   (c) Type the following:

   DESTINATION GATEWAY NETMASK INTERFACE [TYPE] [OPTIONS]

   default DEFAULTGATEWAY

   where DESTINATION, GATEWAY, and NETMASK are IP addresses associated with bond2 of the target utility node or eth2 of the single node, and DEFAULTGATEWAY is the default gateway IP.

   Example:

   10.192.0.0 10.29.129.1 255.192.0.0 -

   default 10.29.129.3 - -

   IMPORTANT: Coordinate with the customer network administrator to ensure connectivity between the source system and these IP addresses works.

   (d) Save the file.

   (e) Restart network service by typing the following command:

   ```
   service network restart
   ```

2. Configure Avamar replication to the target system.
   (a) Log in again to Avamar single node server.
   (b) Open /usr/local/avamar/etc/repl_cron.cfg.
   (c) Modify the following parameter:
      - --dstaddr=BOND2ETH2IPADDR

        where BOND2ETH2IPADDR is either the IP address of bond2 on the utility node or the IP address of eth2 on the target system, depending on whether it is multi-node or single node.
   (d) Save the file.

Accelerator node configuration

The Avamar NDMP Accelerator Node is a dedicated Avamar client that requires initial networking configuration in order to communicate with an Avamar Data Store Gen4 system.

If an Avamar customer has purchased an accelerator node, consider the following:

- To perform initial configuration of an Accelerator node, do the following:
  1. Configure your laptop as follows:
     (a) From **Start**, open **Settings > Network and Dial-up Connections** and select **Local Area Connection**.
     (b) Select **Properties**.
     (c) Double-click **Internet protocol (TCP/IP)**.
     (d) Click **Use the following address**.
     (e) Set IP address to 192.168.0.100.
     (f) Set netmask to 255.255.255.0.

         Setting a gateway is not necessary.
     (g) Click **OK**.
     (h) Click **OK** again.
     (i) At a Windows command prompt, type `ipconfig` to ensure the new IP address is active.

         If not, disable and reenable the Ethernet connection in the **Local Area Connection** dialog box.
  2. Connect the laptop to the accelerator node's iDRAC network interface with a Cat6 Ethernet cable.

     Refer to *ADS Gen4 hardware* (page 55) for more information.

     The iDRAC IP address is 192.168.0.120.

User=root

  3. On your laptop, open a web browser to http://192.168.0.120.

     See next image.

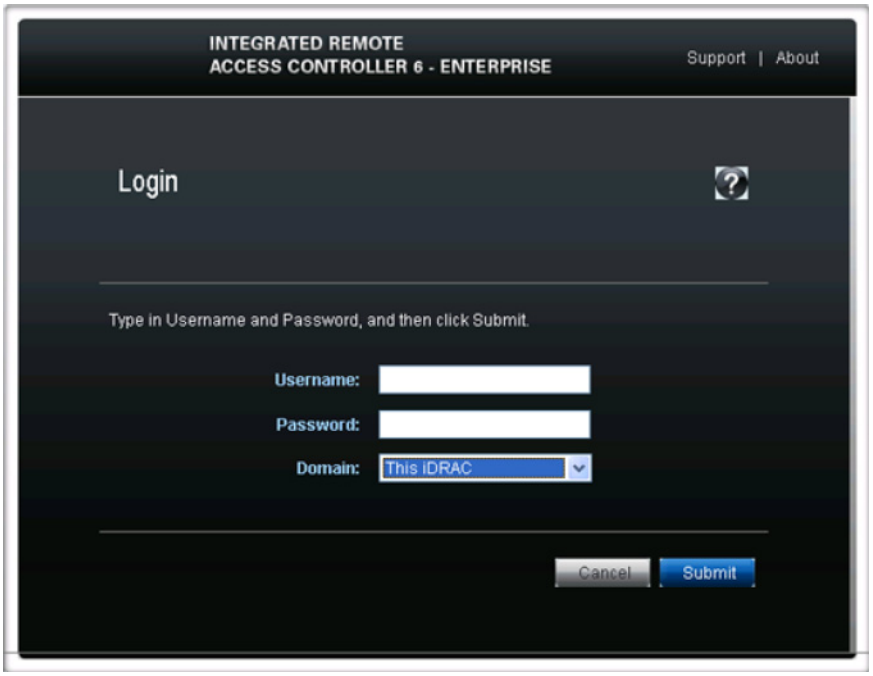

Log into the accelerator node as user root with root password and click **Submit**. The Virtual Console and Virtual Media window appears. See next image.

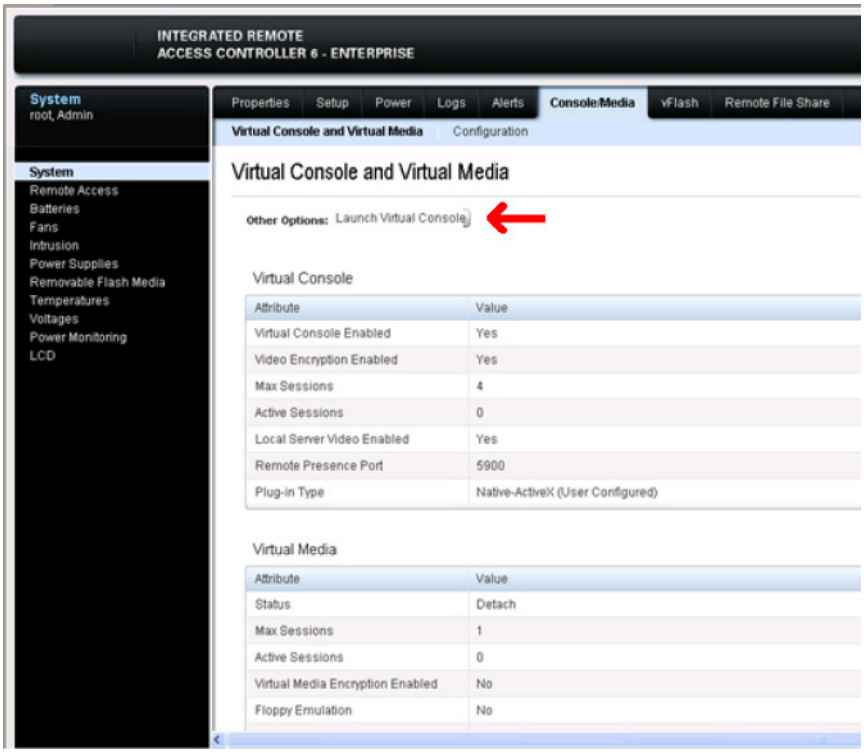

4. Go to the **Console/Media** tab and click **Launch Virtual Console**.

   This action takes a few minutes to open the console. See next image.

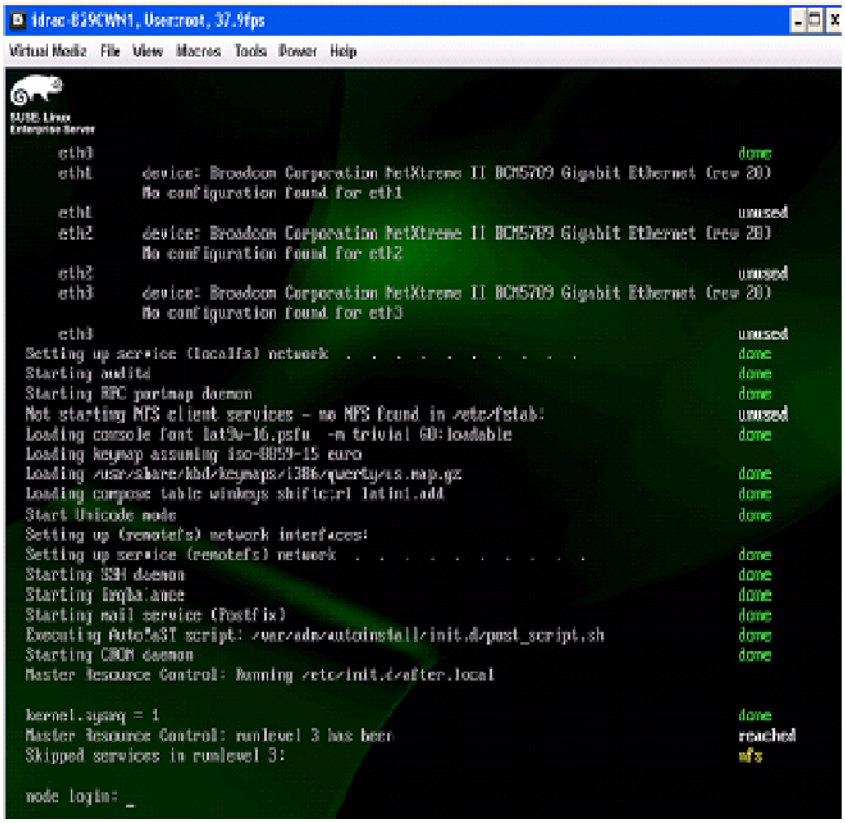

5. At the console command prompt, open the YaST Linux configuration application by typing:

   `yast`

   The YaST Control Center appears. See next image.

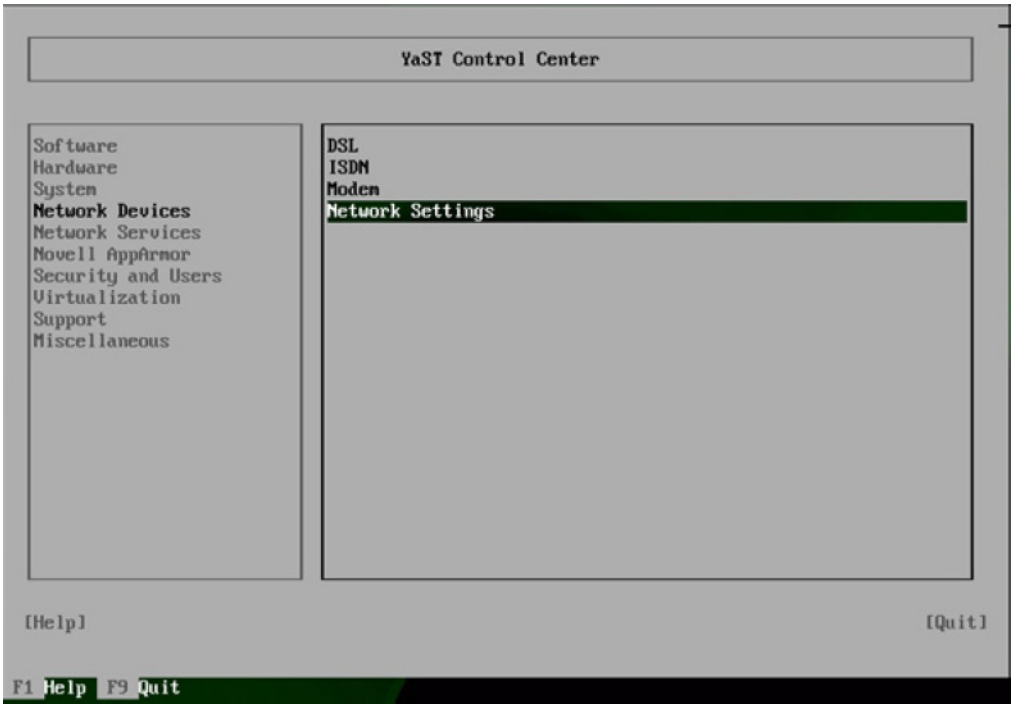

NOTE: In YaST, use the **Tab** key to move to an option and correct typing errors or replace default settings by typing **Ctrl-H** (neither the **Delete** nor **Backspace** keys provide the functions printed on the keys). To select a checkbox (a set of parentheses), press the space bar.

6. Use the down arrow to highlight **Network Devices**, the right arrow to move to the box on the right, and the down arrow to highlight **Network Settings**, and then press **Enter**.

   The Network Settings screen appears. See next image.

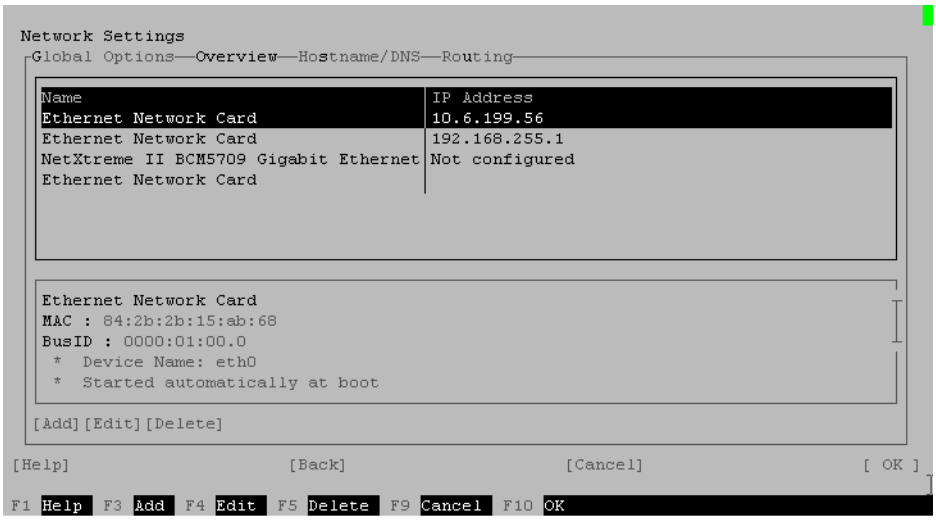

7. Tab to the Name list and uses the arrow keys to select the eth0 card.

   As you move from one entry to the next in the list, the description changes in the bottom box. Look for `Device Name: eth0`.

8. After selecting the eth0 device, tab to **Edit** and press **Enter**.

   The Network Card Setup screen appears. Use the arrow keys to select the **Address** tab, if necessary. See next image.

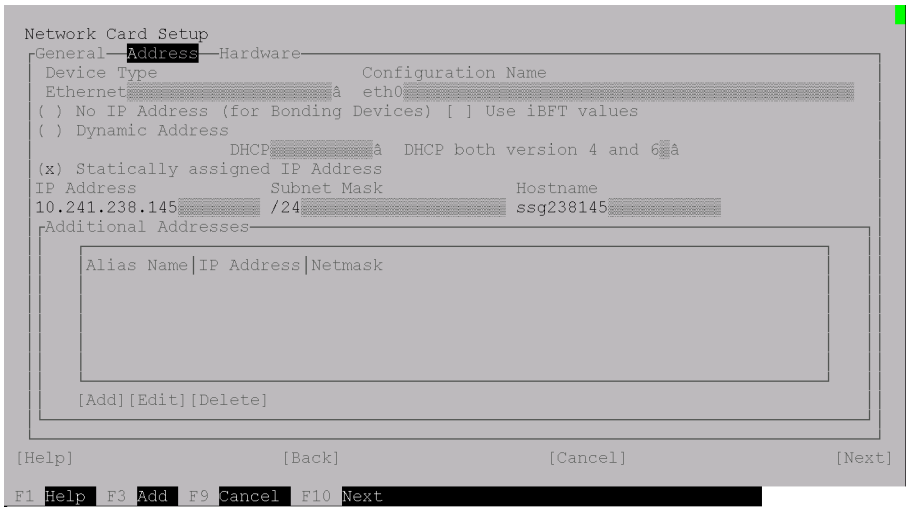

> **NOTE:** In YaST, use the **Tab** key to move to an option and correct typing errors or replace default settings by typing **Ctrl-H** (neither the **Delete** nor **Backspace** keys provide the functions printed on the keys). To select a checkbox (a set of parentheses), press the space bar.

9. Configure DNS parameters (hostname, domain, search, and primary and secondary name servers), gateway, IP address and netmask of the backup network (eth0, Gb1) of the accelerator node.

   (a) Tab to **Edit** near the bottom of the screen, and press **Enter**.

   (b) Tab to **Statically assigned IP address**.

   (c) Press the space bar to select the checkbox (with an **X**).

   (d) Tab to **IP address**.

   (e) Type the IP address of the eth0 port of the single node server.

   (f) Tab to **Subnet Mask**.

   (g) Type the subnet mask address.

   (h) Tab to **Hostname**, use **CTRL-H** to delete the default hostname, and then type the hostname for the Avamar node.

   Hostname must resolve to the IPv4 address used by backup clients, the address that will be assigned to the Avamar node backup network interface (eth0) in the followup Avamar server software installation.

(i) Tab to **Next** at the bottom of the screen and press **Enter**.

The Network Settings screen appears.

(j) Tab to the top menu, use the arrow keys to select **Hostname/DNS**. See next image.

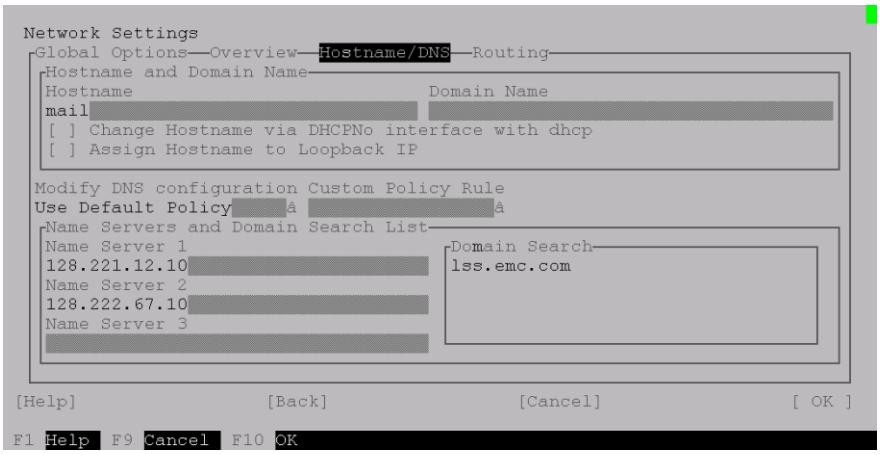

(k) Tab to **Hostname**, use **CTRL-H** to delete the default hostname, and then type the correct hostname.

This parameter must be the short name of the hostname entered in step h.

(l) Tab to **Domain Name**, use **CTRL-H** to delete the default domain name, and then type the correct domain name.

(m)Tab to the DNS configuration section and specify those parameters.

Enter up to three IPv4 addresses of DNS recurring name resolving servers.

(n) Tab to **Domain Search**, use the right arrow to move the cursor to the end of the default entry, use **CTRL-H** to delete the default domain name, and then type the correct domain name to be searched.

(o) Tab to the top menu and use the right arrow to select **Routing**.

The Network Settings-Routing screen appears and **Default Gateway** should be highlighted. See next image.

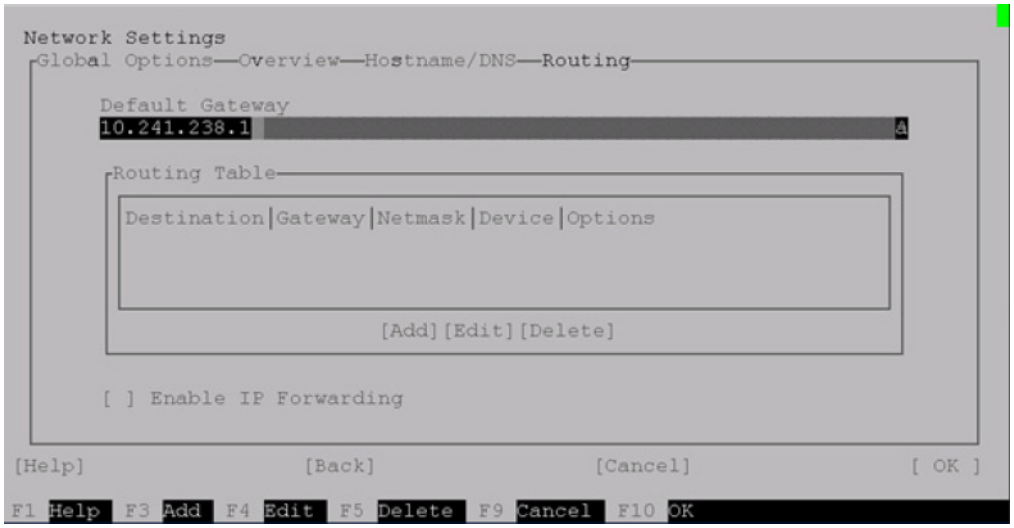

10. Type the default gateway address.
11. Tab to **OK** at the bottom right of the screen and press **Enter**.

    The Network Settings screen closes and a saving configuration information message is displayed.
12. In the YaST Control Center, tab to **Quit** at the bottom right of the screen and press **Enter**.
13. Close the iDRAC console session and the browser.
14. On the accelerator node, set the node type by typing the following:

    `/usr/local/avamar/src/change_nodetype --accelerator`
15. Disconnect the Ethernet cable from the iDRAC port of the accelerator node.
16. Verify connectivity to eth0 of each accelerator node from the customer's network.

    Do this by connecting to a device on the customer's network and successfully establishing a PuTTY session with the accelerator node.

- One additional Avamar Gen4-specific configuration step must be performed. On the Avamar Gen4 single node server, add the accelerator node to the probe.xml file by running the following command:

  `nodedb add node --addr=IPADDR --type=accelerator --nwgrp=1`

  where **`IPADDR`** is the IP address of the accelerator node.

  This command creates an entry for the accelerator node in the probe.xml file of the Avamar server.

  > **NOTE:** Inclusion in the probe.xml does not mean the accelerator node is part of the Avamar server. This entry just associates the accelerator node with that Avamar server.

The probe.xml entry includes a network_interface element, like the probe.xml entries for all Gen4 nodes. If you want to add an additional network_interface element for the accelerator node, type the following command:

```
nodedb add if --node=0.accelerator.0 --addr=IPADDR --nwgrp=1
```

For further installation instructions, refer to the *Avamar NDMP Accelerator 6.x User Guide*.

APPENDIX A—MOUNTING AVAMAR SINGLE NODE SERVER

The primary purpose of this appendix is to describe how to mount an Avamar Data Store Gen4 single node server in an EMC Titan rack. It can also be used as a general guide for mounting an Avamar Data Store Gen4 single node server in customer environments that use similar, standard racks.

Refer to *EMC Avamar Data Store Site Prep Technical Specifications* at http://support.EMC.com. for component part numbers, and for preinstallation prep instructions.

Start ADS Gen4 installation by unpacking components and identifying the parts inside.

WARNING

ADS Gen4 nodes are heavy and should be installed in a rack by two people. To avoid personal injury or damage to the equipment, do not attempt to lift and install the node in a rack without a mechanical lift or help from another person.

Recommended tools and supplies

You might need the following items to install an Avamar Data Store single node server:

- Phillips-head screwdriver
- Tie wraps
- Flashlight
- Mechanical lift

Universal, Telco rail kits

Depending on customer requirements, one of two different sets of rail kits are used in node installation: Universal or Telco. If Telco rails are ordered, both kinds of rails are delivered.

- Universal rail kits are subdivided further based on the size of nodes being installed (EMC part number 100-580-079 or 100-563-392 for 7.8 TB nodes and EMC part number 100-580-076 for all other sized nodes). Rail kits for the ADS switches in the Titan rack are EMC part number 100-580-529.
- Telco rail kits are the same as in ADS Gen3 (EMC part number 106-562-045 for nodes and EMC part number 100-580-597 for switches). Telco rails can be ordered for all nodes except 7.8 TB nodes, which cannot be installed in a Telco rack.

Universal rail kits

ADS Gen4 nodes use three universal rail assemblies, two assembly options for 7.8 TB nodes and one assembly for all other sized node.

Installation for 1.3 TB, 2.6 TB, and 3.9 TB capacity nodes (page 62) and *Installation for 7.8 TB capacity nodes* (page 66) describe the use of universal rail assembly parts and an EMC Titan rack as example installations.

7.8 TB single node server rail kits

For all ADS Gen4 7.8 TB nodes installed in an EMC Titan rack, one of two universal rail kits shown in the following images should be used during installation.

PN 100-563-392

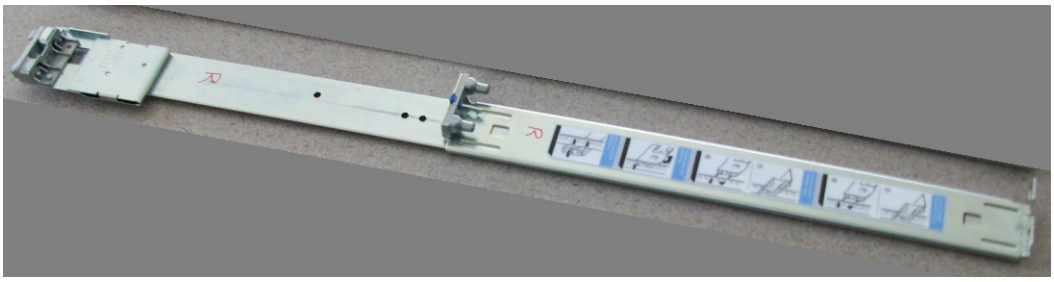

PN 100-580-079

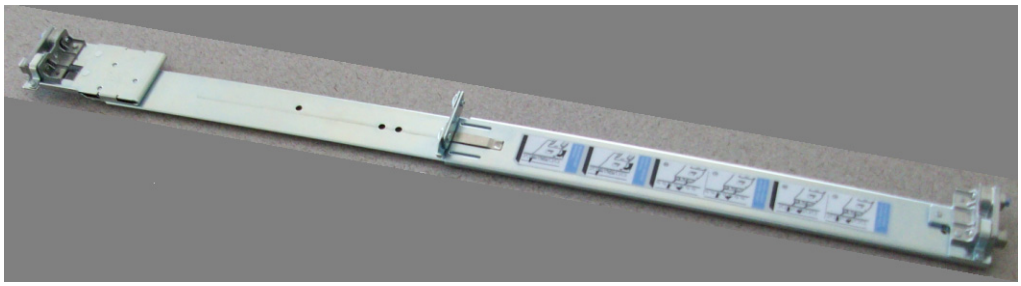

Rail kit for all other sized node

For all ADS Gen4 nodes except 7.8 TB nodes installed in an EMC Titan rack, the universal rail kit shown in the next image should be used during installation (rail shown adjusted to three lengths).

PN 100-580-076

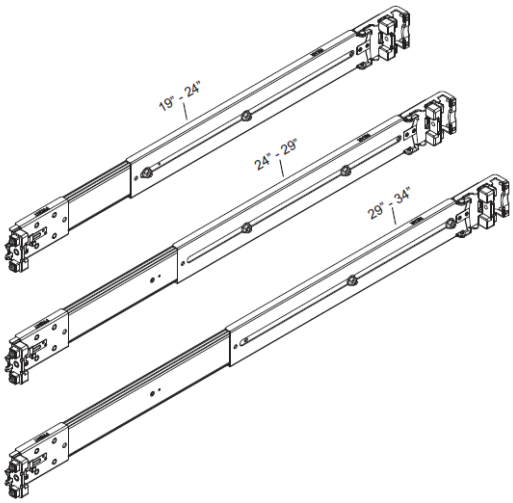

Adjusting rail length

The front and rear mounting channels in EMC Titan racks are 24 inches apart (measured from the inside surfaces). The default setting for universal rail kits supports racks in which the front and rear mounting channels are 24 to 29 inches apart. Alternative settings support racks 18-24 inches and 29-34 inches deep.

To change the rail length, adjust the hardware in the middle of each outside rail to define the range stamped on the inside surface of the outside rail.

Telco rack installations

If you are installing ADS Gen4 in a Telco rack, the rail kit shown in the next image should be available in the packing materials.

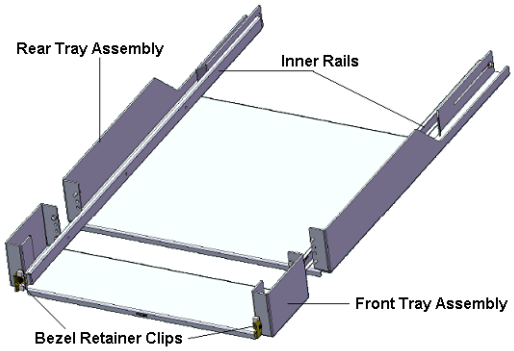

This rail assembly has three main parts:

- **Inner rail** - a solid segment that attaches to the node
- **Front tray assembly** - a segment that attaches to the front of the Telco rack
- **Rear tray assembly** - a segment that attaches to the rear of the Telco rack

The inner rails are first attached to the node and then attached to the tray assemblies in two places each: in the slot at the back of the rear tray and to the front tray.

Installation for 1.3 TB, 2.6 TB, and 3.9 TB capacity nodes (page 62) and *Installation for 7.8 TB capacity nodes* (page 66) use the universal rail assemblies described in the previous section and an EMC Titan rack as an example. For Telco installation, alter those instructions as required.

IMPORTANT: The 7.8 TB nodes do not support installation in a Telco rack.

ADS Gen4 hardware

Before handling ADS Gen4 equipment, first familiarize yourself with Gen4 nodes and switches. See the images that follow for details.

7.8 TB capacity node

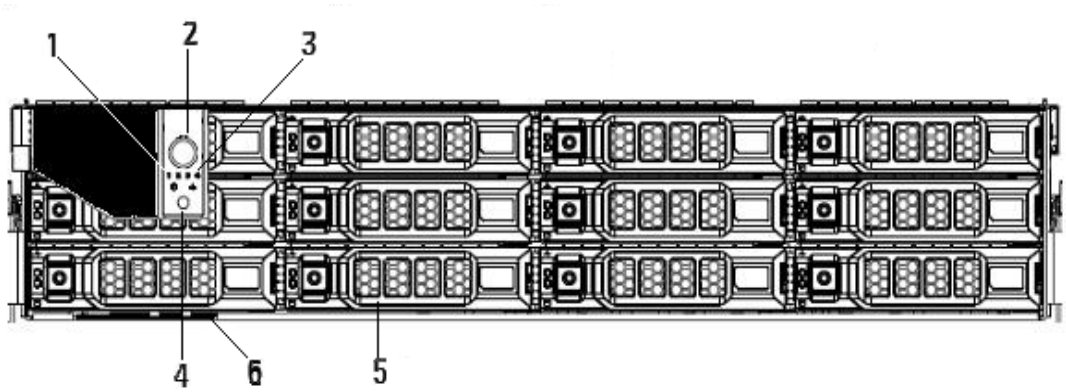

Front view

NO.	FEATURE	DESCRIPTION
1	LED panel	
2	Power-on indicator, power button	When the bezel is installed, this button is not accessible.

NO.	FEATURE	DESCRIPTION
3	Non-Maskable Interrupt (NMI) button	Used to troubleshoot software and device driver errors. Press by using the end of a paper clip. Use this button only if directed to do so by qualified support personnel.
4	System identification button	Provides a power on indicator for the front of the node.
5	Hard drives	Twelve 3.5” hot swappable hard drives.
6	Systems Identification Panel (luggage tag)	EMC part number, revision, and serial number.

Numbers 1-4 are located on a swingout front panel in front of three hard drives at left. The front panel rotates left on a hinge for hard drive replacement. The cable from node to front panel is EMI shielded. See the following image.

⚠ CAUTION

The swingout front panel should not be rotated beyond 90 degrees. Doing so might damage the hinge or cable. It should be either parallel or perpendicular to the front of the node. Note that these nodes are shipped with the hinged front panel perpendicular to the chassis. So care should be taken when lifting the node out of the box.

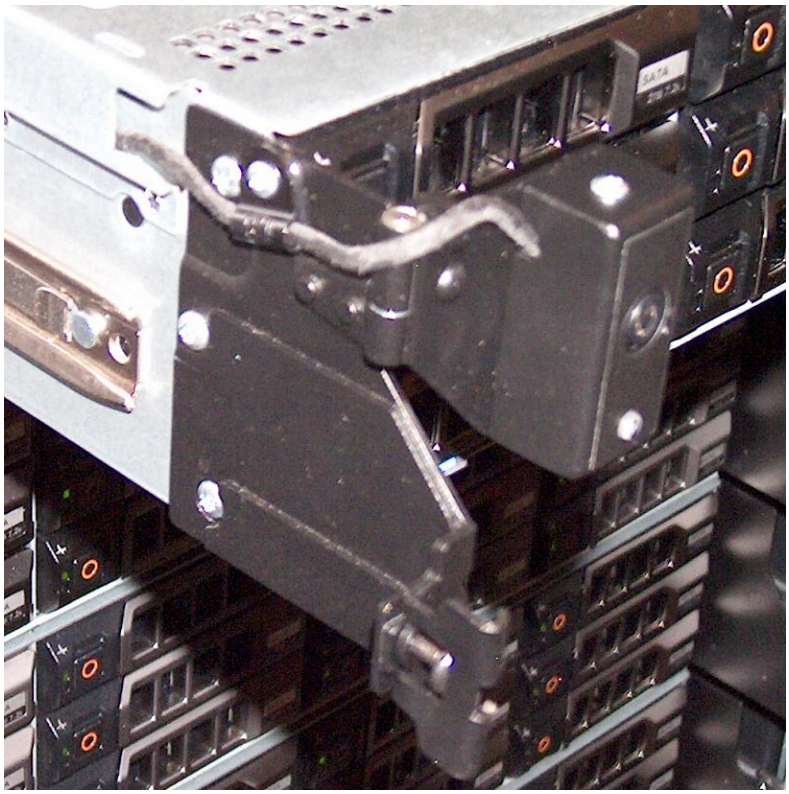

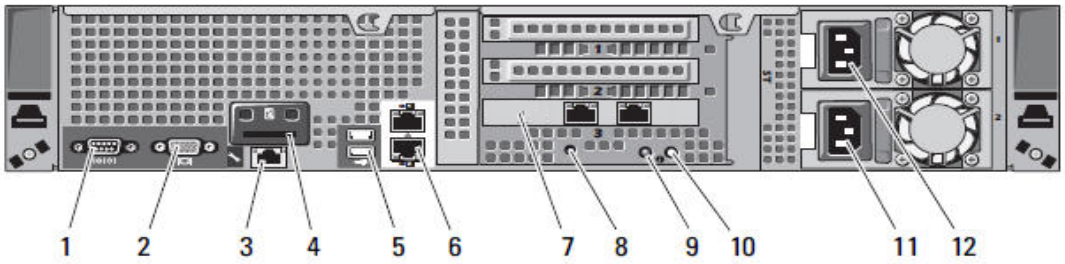

Rear view

NO.	FEATURE	DESCRIPTION
1	Serial connector	Connects a serial device to the system.
2	Video connector	Connects a VGA display to the system.
3	iDRAC6 Enterprise port (optional)	Dedicated management port for the iDRAC6 Enterprise card.
4	VFlash media slot	Connects an external SD memory card for the iDRAC6 Enterprise card.
5	USB connectors	Two available.
6	Ethernet ports	GB1 (eth0) on top, Gb2 (eth1) on bottom
7	Ethernet ports	GB3 (eth2) on left, Gb4 (eth3) on right
8	System status indicator connector	Connector for attaching a system indicator extension cable that is used on a cable management arm.
9	System status indicator	Provides a power on indicator for the back of the node.
10	System identification button	Use to locate a particular node in the rack. When pushed, the LCD panel on the front and the system status indicator on the back flash blue until the button is pushed again.
11	Power supply 2	750W power supply
12	Power supply 1	750W power supply

1.3 TB, 2.6 TB, and 3.9 TB capacity nodes

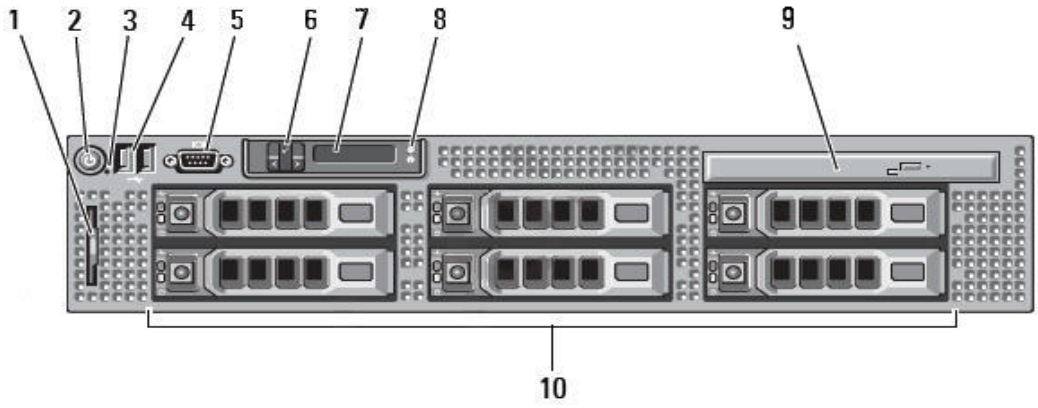

Front view (3.9 TB example show above)

NO.	FEATURE	DESCRIPTION
1	System identification panel	A slide-out label panel for system information including the Express Service tag, Embedded NIC1 MAC address, and iDRAC6 Enterprise card MAC address.
2	Power-on indicator, power button	When the bezel is installed, this button is not accessible.
3	Non-Maskable Interrupt (NMI) button	Used to troubleshoot software and device driver errors. Press by using the end of a paper clip. Use this button only if directed to do so by qualified support personnel.
4	USB connectors	Two available.
5	Video connector	Connects a monitor to the node.
6	LCD menu buttons	Allows you to navigate the control panel LCD menu.
7	LCD panel	Provides system ID, status information, and system error messages. Lights blue during normal operation and amber when the node needs attention, and it displays an error code followed by descriptive text.
8	System identification button	Use to locate a particular node in the rack. When pushed, the LCD panel on the front and the system status indicator on the back flash blue until the button is pushed again.
9	Filler panel	
10	Hard Drives	• 1.3 TB - Two 3.5" hot swappable hard drives • 2.6 TB - Four 3.5" hot swappable hard drives • 3.9 TB - Six 3.5” hot swappable hard drives.

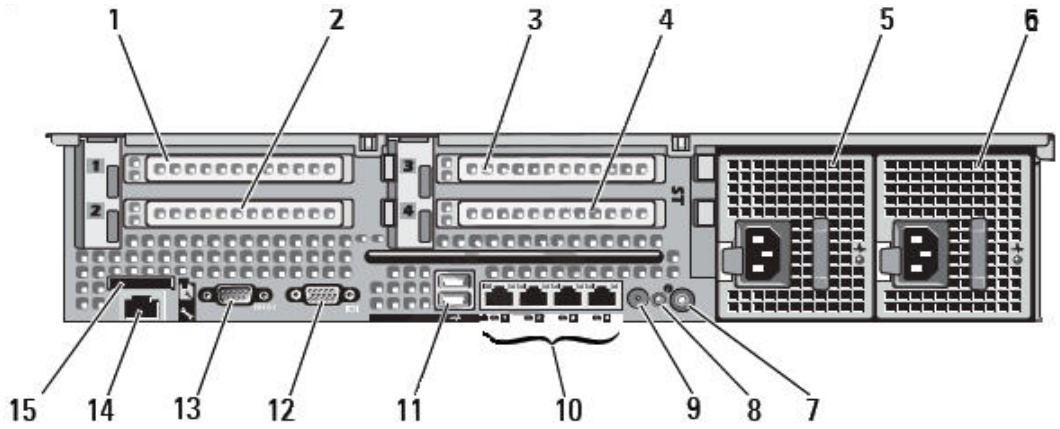

Rear view

NO.	FEATURE	DESCRIPTION
1	PCIe slot 1	Unused
2	PCIe slot 2	Unused
3	PCIe slot 3	Unused
4	PCIe slot 4	Unused
5	Power supply 1	570W power supply
6	Power supply 2	570W power supply
7	System identification button	Use to locate a particular node in the rack. When pushed, the LCD panel on the front and the system status indicator on the back flash blue until the button is pushed again.
8	System status indicator	Provides a power on indicator for the back of the node.
9	System status indicator connector	Connector for attaching a system indicator extension cable that is used on a cable management arm.
10	Ethernet ports	Left to right: Gb1 (eth0), Gb2 (eth1), Gb3 (eth2), Gb4 (eth3)
11	USB connectors	Two available.
12	Video connector	Connects a VGA display to the system.
13	Serial connector	Connects a serial device to the system.
14	iDRAC6 Enterprise port	Dedicated management port for the iDRAC6 Enterprise card.
15	VFlash media slot	Connects an external SD memory card for the iDRAC6 Enterprise card.

Accelerator nodes

Avamar® NDMP Accelerator node hardware is identical to that of 1.3 TB, 2.6 TB, and 3.9 TB nodes, except accelerator nodes have two hard drives. All other components are identical for the four node types.

See *1.3 TB, 2.6 TB, and 3.9 TB capacity nodes* (page 58) for:

- Front view (6-hard drive version) and component descriptions
- Rear view and component descriptions of an accelerator node

ADS Gen4 network switches

Typically, the customer provides a network switch for connectivity between the ADS Gen4 single node server and backup clients, replication targets, and so forth. The information in section assumes the customer ordered an ADS Gen4 network switch. See next image showing a dual switch installation (shown from rear of rack).

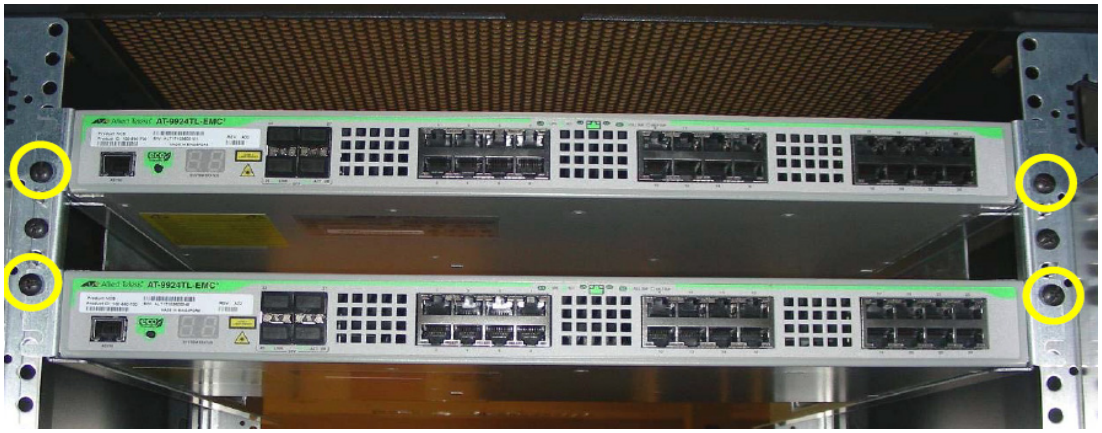

Cable connection mapping between the single noder server and this switch is determined by the customer. Port 24 is reserved as a service port. See next image.

Front view (faces rear of rack)

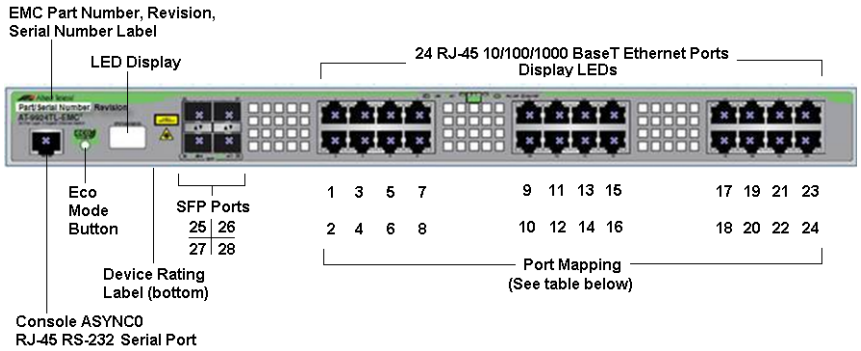

Switch LED display status

The Eco Mode button activates the 7-segment LED display on the front of the switch. To save power, the default is off. Press the Eco button for 2-3 seconds to display system status on the LED display for five seconds. See the following image for status details.

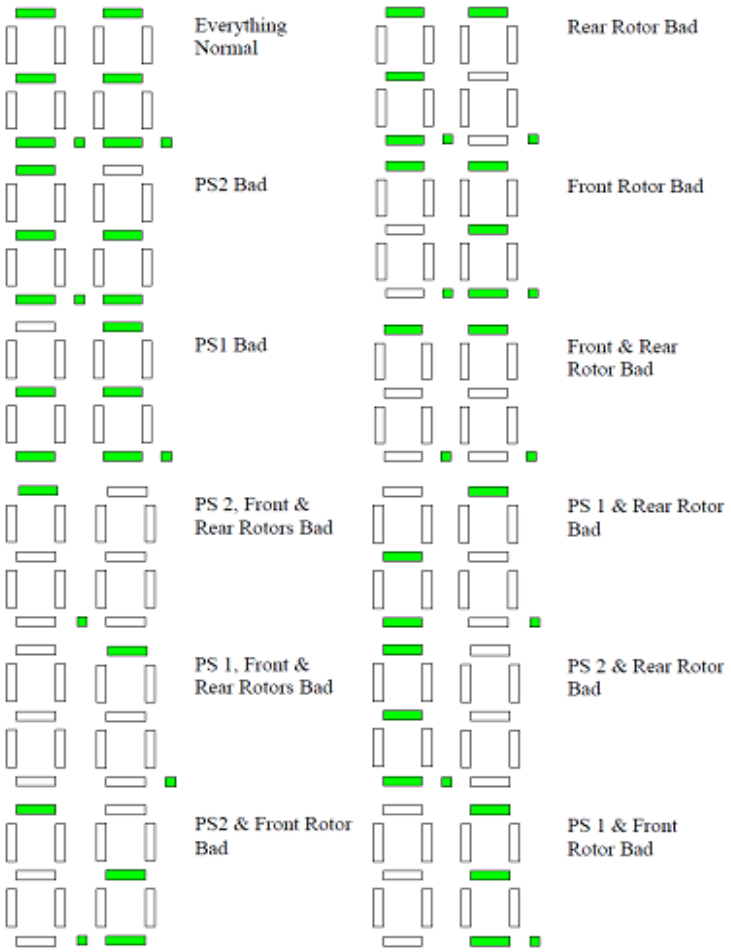

Switch RJ-45 LED status

Refer to the following table for LED status for each RJ-45 Ethernet port.

POSITION	LABEL	GREEN LED ON	GREEN LED FLASHING	GREEN LED OFF
Left	L/A	Link	Activity	No link
Right	D/C	Full duplex	Collisions	Half duplex

Switch SFP LED status

Refer to the following table for LED status for each SFP port.

LABEL	ON	GREEN LED FLASHING	OFF
L/A	Link	Activity	No link

Rear view (faces front of rack)

Serial number - top left
Power plug 1 - right
Power plug 2 - left
Air inlet - center

Installation for 1.3 TB, 2.6 TB, and 3.9 TB capacity nodes

This installation procedure supports the following scenarios:

- Installing an Avamar Data Store Gen4 single node server in an EMC Titan rack.
- Installing an Avamar Data Store Gen4 single node server in a customer environment that uses similar, standard racks. In this case, you should take the following instructions as a general guideline that might require adjustment depending on the customer environment.

1. Remove the inner rails from the universal rail kit. See *Universal rail kits* (page 53) for additional detailed information.

   (a) Pull the blue inner rail release button, and extend the inner rail to the lock position. See next image.

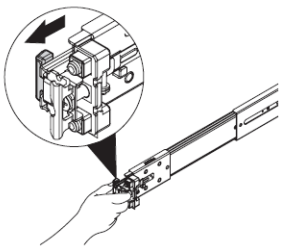

   (b) Slide the white disconnect tab forward (in the direction of the arrow) to release the inner rail from rest of the assembly. See next image.

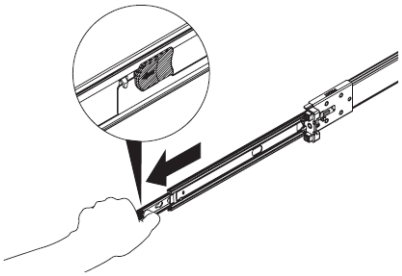

(c) Remove the inner rail. See next image.

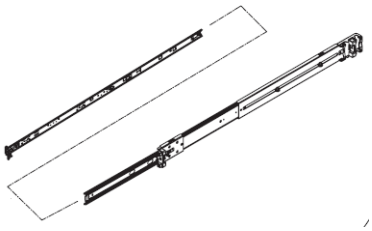

2. Attach the inner rails to the single node server being installed.
   (a) Align the protruding rail notches with the connection studs on the node.
   (b) Push the rail along the server until the studs fit securely into the notches.

   An audible click indicates that the rail is secure. See next images (node front is at left in both images).

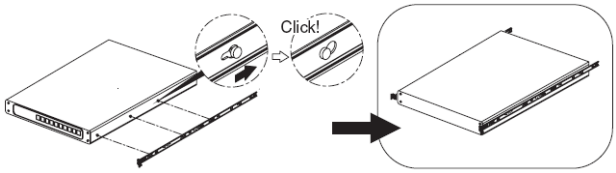

3. Attach the outside portion of the universal rail kit to the rack.
   (a) Pull the middle rail out and into the locked position.

   Use the exposed middle rail for leverage as you attach the assembly.

   (b) From the front of the rack, position the alignment pins and release bracket over the rear cabinet mounting channel.
   (c) Insert the alignment pins on the rail assembly into the rear channel holes for the bottom 1U (1.75”) of selected rack space. See next image.

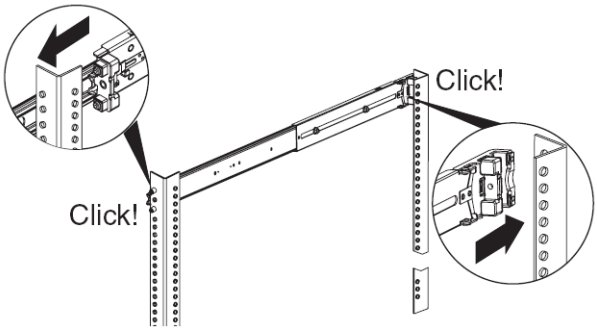

Push the assembly backwards onto the channel. An audible click indicates that the connection is secure.

(d) Pull the front alignment pins into position in the cabinet's front channel.

An audible click indicates the rail is firmly attached to the channel. See previous image.

4. Install the node in the rack.

WARNING

The node is heavy and should be installed in a rack by two people. To avoid personal injury or damage to the equipment, do not attempt to lift and install the node in a rack without a mechanical lift or help from another person. Before mounting the node to the rails, ensure that the ball bearing retainer sheath is locked forward, and the secondary security plungers are in the default (down and locked) position. See next image.

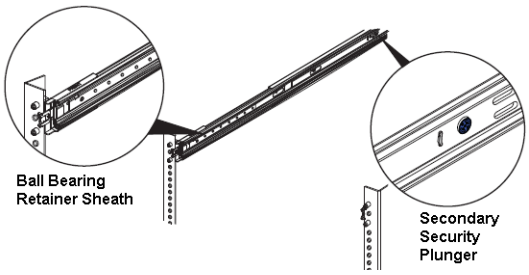

(a) From the front of the rack, align the inner rails attached to the node with the mounting channels on the slide rails. See next image.

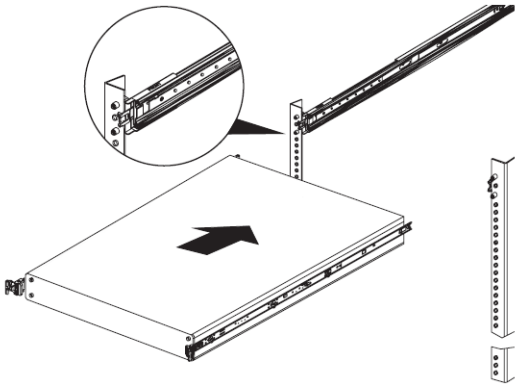

(b) Slide the node into the slide rails until it stops.

⚠ CAUTION

Do not push the node into place using the hard drive handles. Do not push on the LEDs on the front of the node. Doing so may damage the equipment.

(c) All in one motion, push the blue release tab on both side rails and push the node into the rack.

An audible click indicates that the slides rails are engaged and locked. See next image.

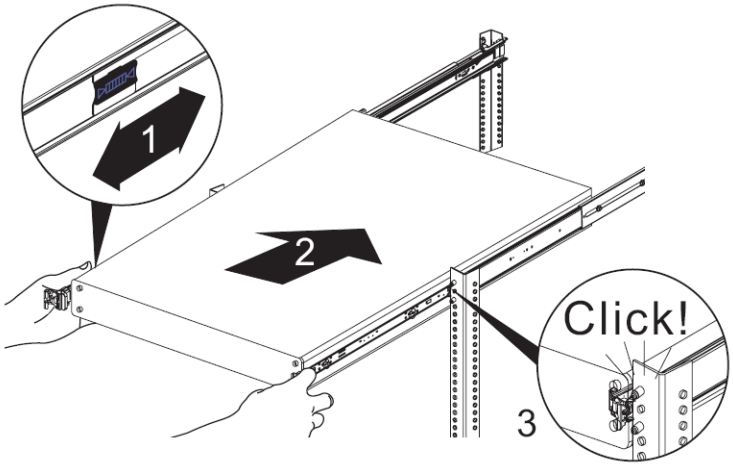

(d) Secure the rail assembly in the rack by inserting and tightening the stabilizer screws (one each side of rack). See next image.

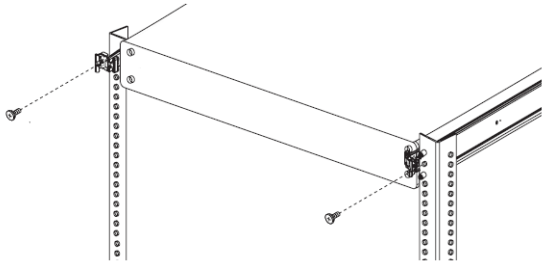

5. Install the bezel by pressing the two handles (marked in light blue) inward while pushing the bezel onto the latch brackets. See the next image.

The bezel (EMC part number 100-580-077) is the same part for all capacity nodes.

6. Go to *Installing and dressing power cords and Ethernet cables* (page 71).

Installation for 7.8 TB capacity nodes

This installation procedure supports the following scenarios:

- Installing an Avamar Data Store Gen4 single node server in an EMC Titan rack.
- Installing an Avamar Data Store Gen4 single node server in a customer environment that uses similar, standard racks. In this case, you should take the following instructions as a general guideline that might require adjustment depending on the customer environment.

  1. Remove the inner rails from the universal rail kits.

     (a) Pull and extend the inner rail to the lock position.

     (b) Press the blue disconnect tab to release the inner rail from the rest of the assembly.

     See next image of a disassembled PN 100-563-392 rail. The inner rail of a PN 100-580-079 is the same as shown here.

2. Attach the inner rails to the node being installed.
   (a) Align the protruding rail notches with the connection studs on the node.
   (b) Push the rail along the node until the studs fit securely into the notches.

   An audible click indicates that the rail is secure. See next image (node front is at left).

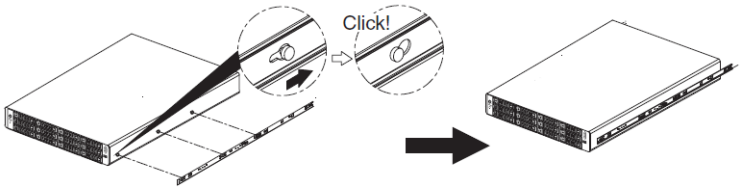

3. Do one of the following:

FOR	DO THE FOLLOWING
Rail kit 100-563-392	Go to step 4.
Rail kit 100-580-079	Go to step 5.

4. Attach the outside portion of the universal rail kit to the rack.
   (a) From the rear of the rack, attach clip nuts over the rear channel holes for the bottom 1U (1.75 in.) of the selected rack space. See next image.

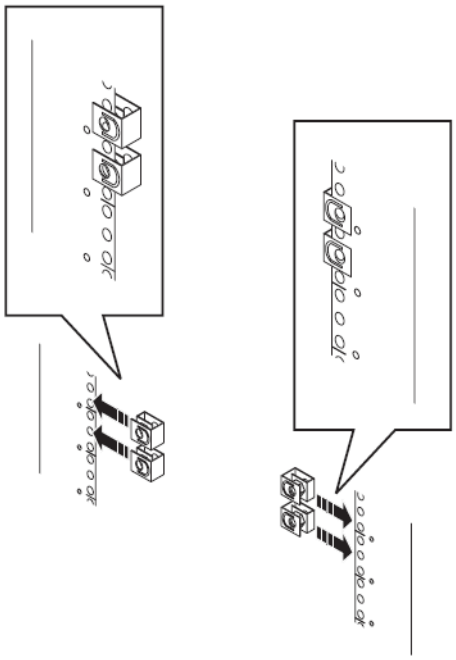

   (b) Align the rear bracket holes of the outside rail with the clip nuts.

   The bracket fits on the outside of the rear channel. See next image.

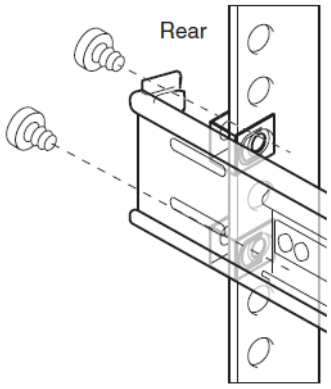

(c) Secure the rear bracket to the channel with two provided screws.

(d) Pull the front alignment pins into position securely in the rack's front channel, then push down slightly to catch the top pin.

An audible click indicates the rail is firmly attached to the channel. See next image.

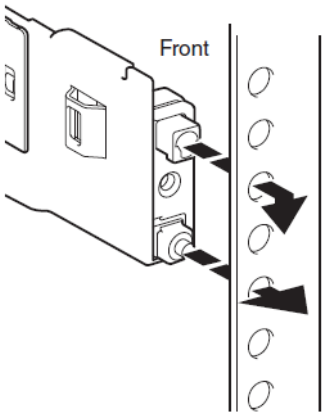

5. Attach the outside portion of the universal rail kit to the rack.

(a) From the front of the rack, position the alignment pins over the rear rack mounting channel. See next image.

(b) Insert the alignment pins on the rail assembly into the rear channel holes for the bottom 1U (1.75 in.) of selected rack space.

(c) Push the assembly backward onto the channel.

An audible click indicates that the connection is secure. See next image.

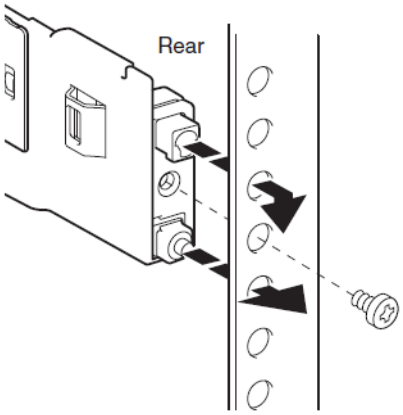

(d) Pull the front alignment pins into position securely in the rack's front channel.

(e) Push down slightly to catch the top pin.

An audible click indicates that the rail is firmly attached to the channel. See next image.

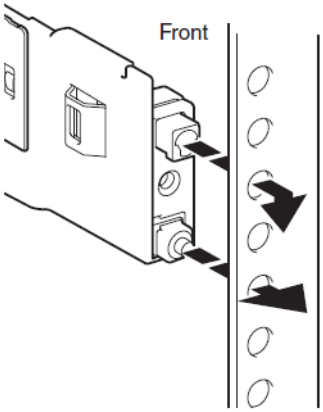

(f) Install the rear securing screw between the alignment pins. See image in step c.

6. Install the node in the rack.

WARNING

The node is heavy and should be installed in a rack by two people. To avoid personal injury or damage to the equipment, do not attempt to lift and install the node in a rack without a mechanical lift or help from another person.

(a) From the front of the rack, align the inner rails attached to the node with the mounting channels on the slide rails. See next image.

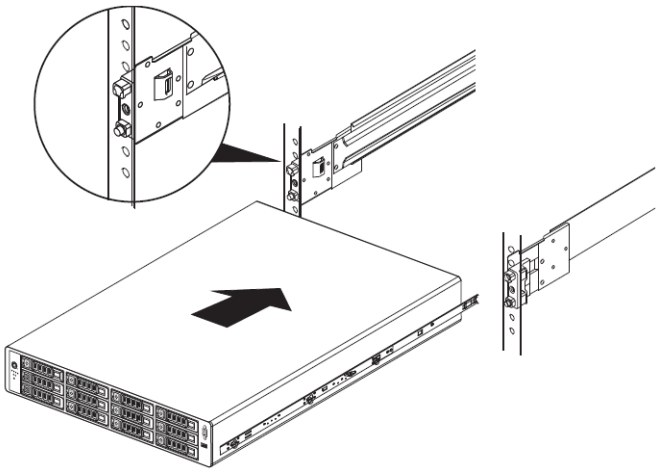

(b) Slide the node into the slide rails until it stops.

⚠ CAUTION

Do not push the node into place using the hard drive handles or rotating front panel. Doing so may damage the equipment.

(c) All in one motion, push the blue release tab on both side rails and push the node into the rack.

(d) Secure the rail assembly in the rack by tightening the captive stabilizer screws directly behind each bezel latch (one each side of rack). See next image.

7. Install the bezel by pressing the two handles (marked in light blue) inward while pushing the bezel onto the latch brackets. See the next image.

The bezel (PN 100-580-077) is same part for all capacity nodes.

WARNING

If you must remove a node during installation, be aware that the rails for 7.8 TB nodes are not designed for the node to be pulled out without support. The rails allow the node to slide out only a small distance before reaching a stopping point. After pushing the blue release tabs on the side rails, the node then slides **completely out of the rack with no further stopping point**. The node is heavy and should be removed from the rack by two people. To avoid personal injury or damage to the equipment, arrange for a mechanical lift or help from another person before pushing the blue release tabs.

8. Go to *Installing and dressing power cords and Ethernet cables* (page 71).

Installing and dressing power cords and Ethernet cables

1. From the back of the rack, install and dress node power cords.

   Avamar Data Store Gen4 nodes have redundant power supplies. Connect the node to a power distribution unit.

   (a) Combine and tie off power cords with the a Velcro strap.

   (b) Ensure the power cords do not droop and touch the bottom of the rack.

2. From the back of the rack, install and dress node Ethernet cabling according to the following steps.

   (a) See *ADS Gen4 hardware* (page 55) for ADS switch and node port diagrams.

   (b) Cable just the **node-side** connections for all purposes (backup, replication, or management).

IMPORTANT: Do not connect any cables to the customer network switch yet. Doing so at this time could interfere with the function of the customer's production network and Avamar software installation.

(c) Combine new cabling with existing ones in the environment, if possible, and tie off excess cabling with a tie wrap.

IMPORTANT: Do not strain any of the cables during installation.

(d) If the nodes' Dell Remote Access Capability (iDRAC) is being used, install and dress the iDRAC cabling as follows:

- If iDRAC is configured to share the eth0 Ethernet port with the node, no further cabling is required.
- If iDRAC is configured to use the dedicated iDRAC Ethernet port, then connect one end of a Cat6 cable to the node's dedicated iDRAC port.

3. After installation of Avamar software on the single node server and configuration of the Avamar Data Store is complete, then you will be instructed to connect network cables to the network switch or switches.

Installing ADS Gen4 network switches

Use the instructions in this section if the customer has ordered an ADS Gen4 network switch. The following procedure describes installation in an EMC Titan rack. For installation in an existing customer rack, you should take the following instructions as a general guideline that might require adjustment depending on the customer environment.

1. Obtain switch rails. See next image of left (top) and right (bottom) rails.

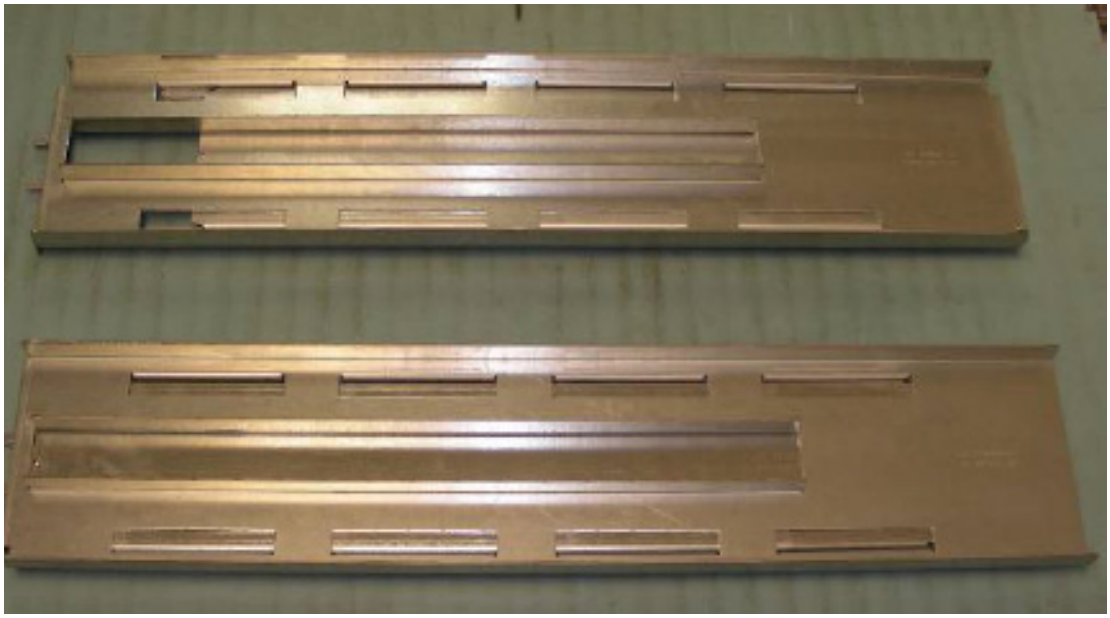

IMPORTANT: Note that the ADS network switch rails support installation of two switches, one above the other. Use both slots for high-availability scenarios as described in *Network configurations supported by ADS Gen4* (page 35).

2. Place switch rail in appropriate rack position (between U37 and U39).

   Top right rail is shown in the next image.

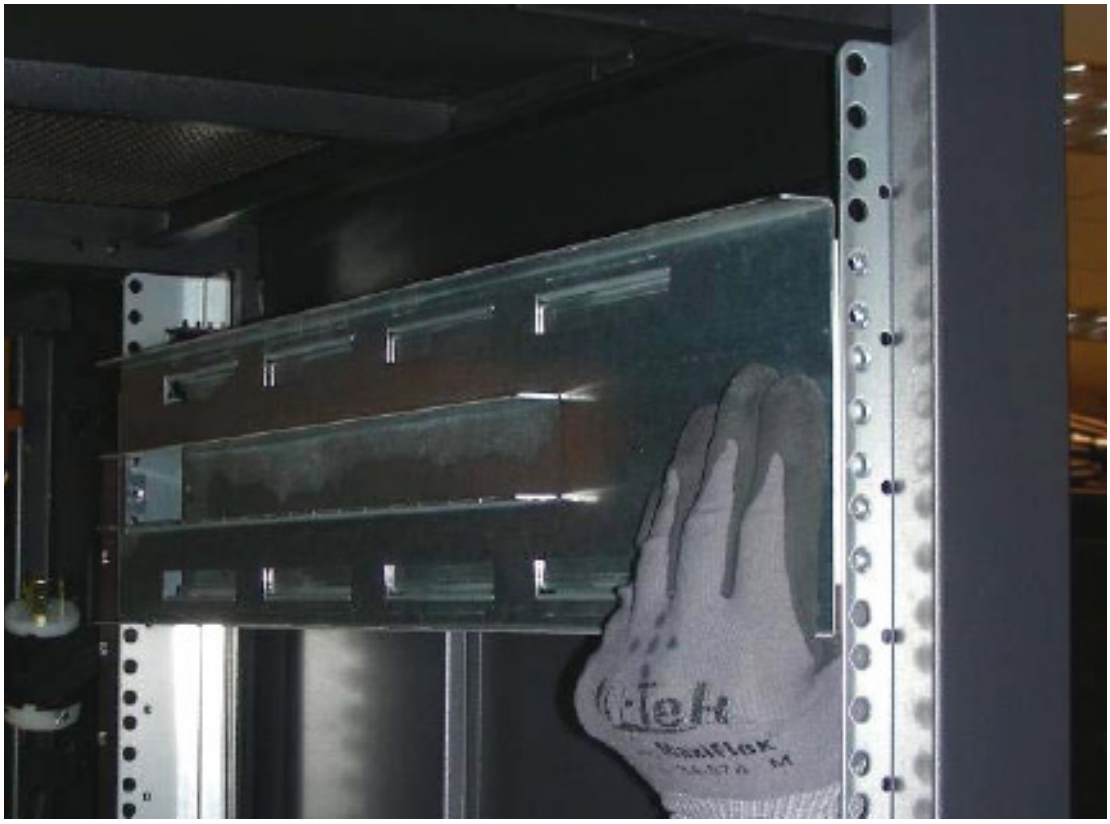

3. Line up rail tab (rear of rail) at the 1U location on rack.

   Ensure the tab is completely through the hole and seated. Secure the backside of the rail by attaching the bottom two screws.

4. Secure the front of the rail by attaching the top and bottom screws. See next image.

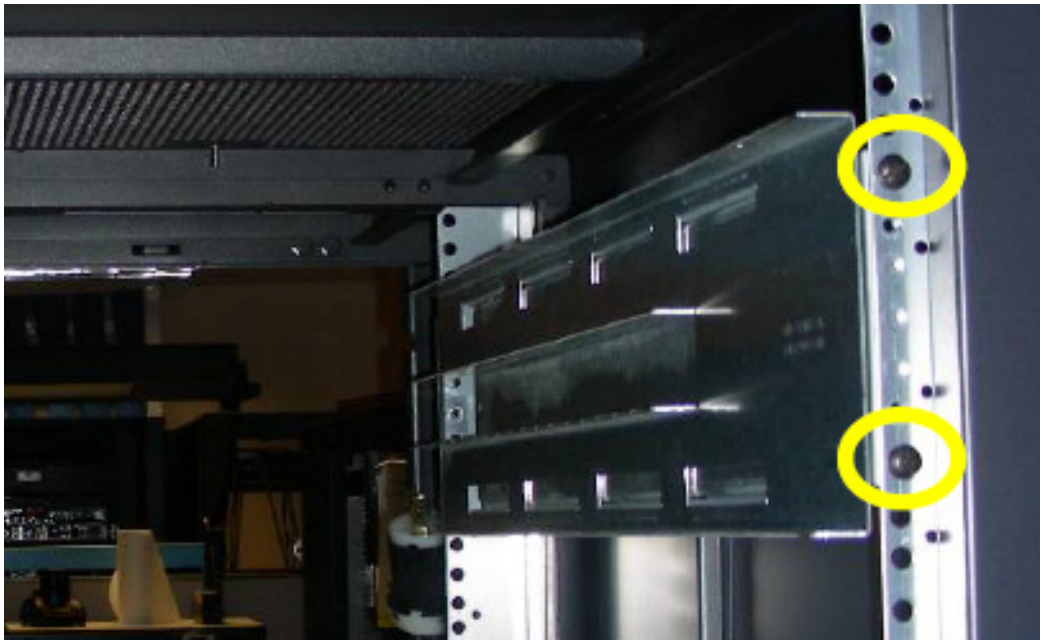

5. Repeat steps 2 through 4 for the left side rail.
6. Obtain rear brackets and phillips hardware included in switch assembly rail kit. See next image.

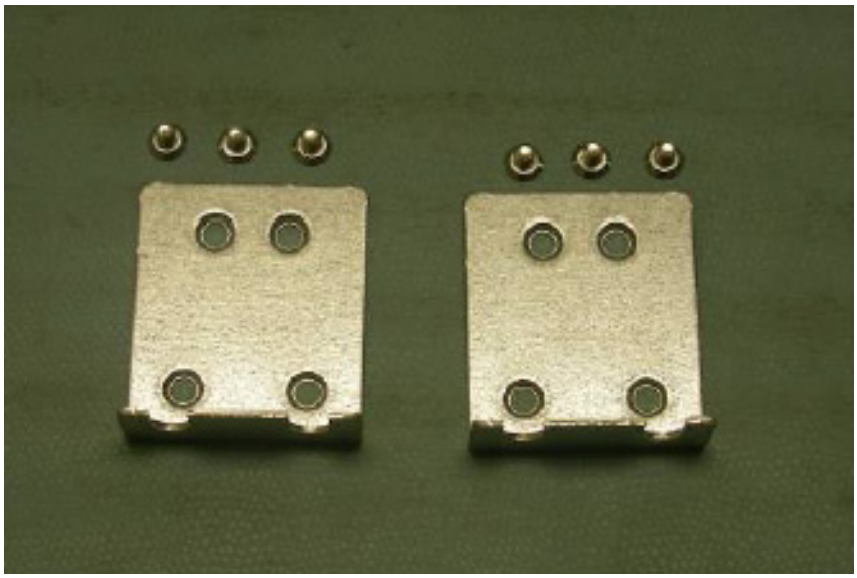

7. Line up one bracket with holes located at the rear of switch assembly (back of switch has RJ-45 connectors) and tighten down hardware provided with switch (16 in/lbs). See next two images.

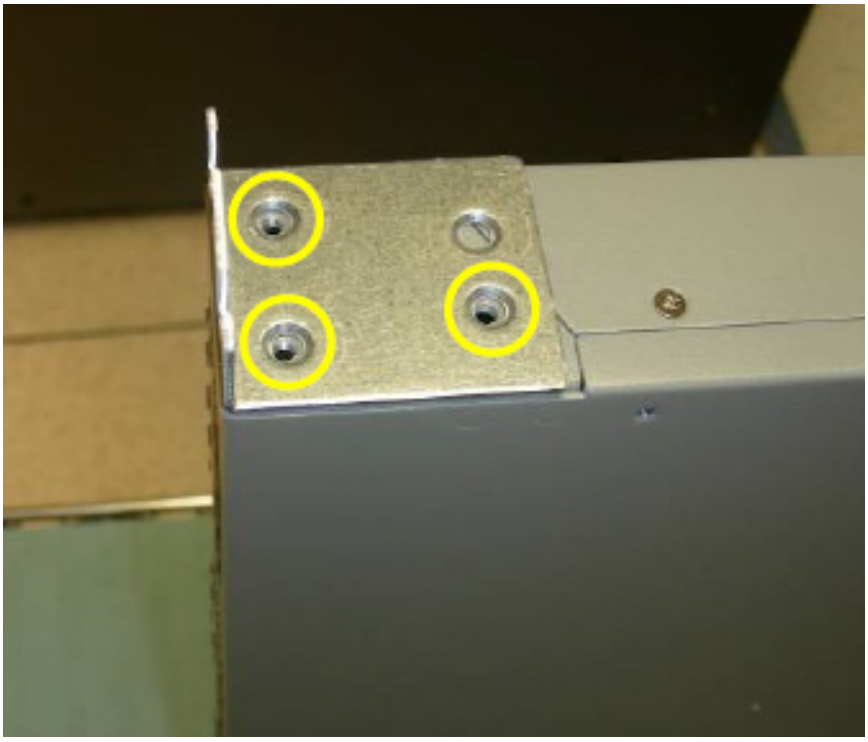

8. Repeat on the other side of the switch.
9. From the rear of the rack, carefully slide the switch into the bottom slot (switch A) of the rail assembly. See next image.
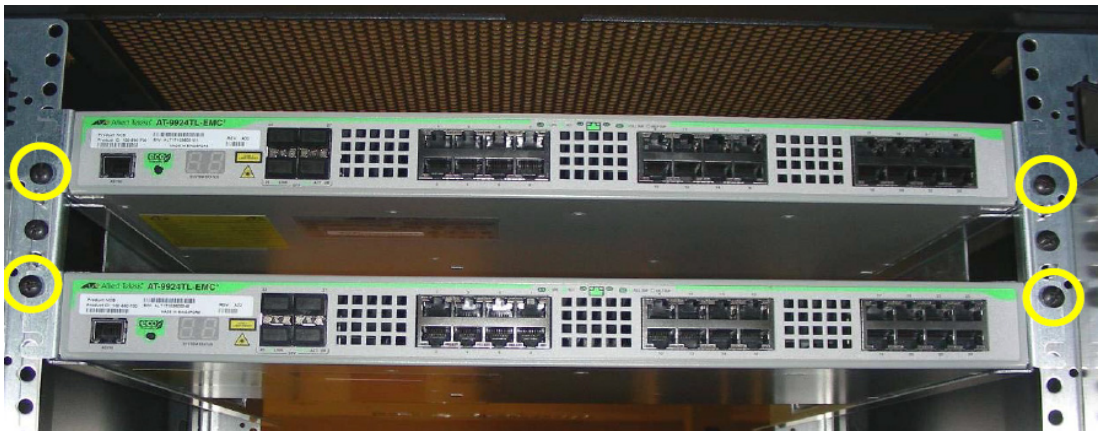
10. Ensure that the switch is seated and flush with the rear rack rails.
11. If you are installing a second switch, repeat steps 6 through 10.
12. Secure the switch or switches with kit hardware. See next image.